PLOT DATE : 10/28/2019 3:20 PM

PLOT BY : JACOB JOYAL

FILE NAME : G:\FITCHBRG\180113-000\CIVIL3D\SHEETSPLAN\LIGHTING\KL_FHR_LTG_PROP.DWG

LIGHTING PLAN LEGEND:

- DECORATIVE LIGHTING UNIT (35-FT TALL)
- COBRA HEAD LIGHTING UNIT (35-FT TALL)
- PEDESTRIAN SCALE LIGHTING UNIT (15-FT TALL)
- LIGHTING UNIT ON TRAFFIC SIGNAL INFRASTRUCTURE (SEE SIGNAL PLANS)
- CONCRETE CONTROL CABINET BASE/ELECTRICAL SERVICE
- B-13-872 HANDRAIL LIGHTING CONTROL PANEL
- HANDHOLES 17"X30"X24"
- LIGHTING CONDUIT (2" SCHEDULE 40 PVC UNLESS NOTED)
- LED HANDRAIL LUMINAIRE
- QUANTITY POINT

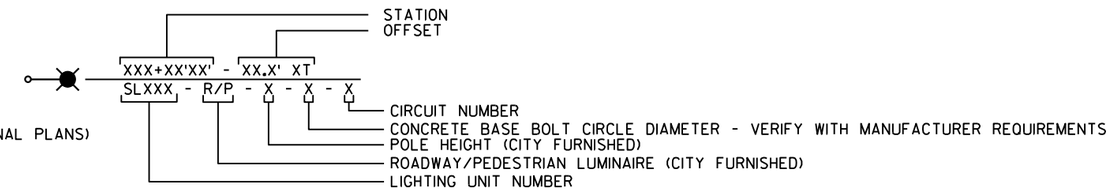

CONDUIT/CONDUCTOR LEGEND

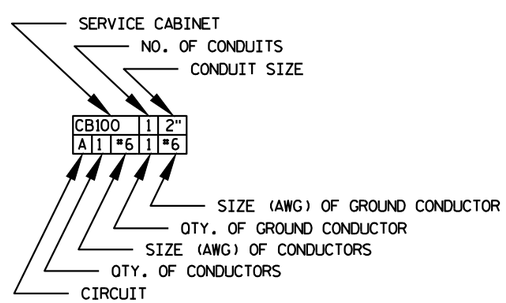

PWO = PULL WIRE ONLY

NEU = NEUTRAL

CONDUCTOR COLOR LEGEND

CB100

LIGHTING CONDUCTORS

A - RED
B - BLACK
C - RED
D - BLACK
E - RED
F - BLACK
G - RED
H - BLACK
I - RED
J - BLACK

240V PHASE TO PHASE

BRIDGE CONDUCTORS

K - RED & NEUTRAL
L - BLACK & NEUTRAL

120V PHASE TO NEUTRAL

CB200

LIGHTING CONDUCTORS

A - RED
B - BLACK
C - RED
D - BLACK
E - RED
F - BLACK
G - RED
H - BLACK
I - RED
J - BLACK

240V PHASE TO PHASE

BRIDGE CONDUCTORS

K - RED & NEUTRAL

120V PHASE TO NEUTRAL

CB300

LIGHTING CONDUCTORS

A - RED
B - BLACK
C - RED
D - BLACK
E - RED
F - BLACK

240V PHASE TO PHASE

GENERAL STREET LIGHTING NOTES:

1) THE ENGINEER SHALL APPROVE THE FINAL LOCATION FOR ALL CONCRETE BASES IN THE FIELD PRIOR TO CONSTRUCTION.

2) THE LOCATION OF EXISTING AND PROPOSED UTILITIES AS SHOWN ON THE PLAN ARE APPROXIMATE. IN ADDITION, THERE MAY BE OTHER UTILITIES WITHIN THE PROJECT AREA WHICH ARE NOT SHOWN. THE CONTRACTOR SHALL VERIFY THE LOCATIONS OF ALL UTILITIES PRIOR TO CONSTRUCTION.

3) NO SPLICES ALLOWED IN PULL BOXES.

4) CITY OF FITCHBURG WILL FURNISH TRANSFORMER BASES, POLES AND LUMINAIRES FOR ROADWAY AND PEDESTRIAN DECORATIVE LIGHTING UNITS. CONTRACTOR SHALL TRANSPORT THESE ITEMS AND INSTALL IN THE LOCATIONS SHOWN IN THE PLANS AS PART OF THE "TRANSPORT AND INSTALL LIGHTING BASE, POLE AND FIXTURE" BID ITEM.

KL Engineering
[A] Better Experience
5400 King James Way
Suite 200
Madison, WI. 53719
Phone: (608) 663-1218
Phone: (800)-810-4012
http://klengineering.com
email@klengineering.com

CITY OF FITCHBURG

LIGHTING PLAN

Project No:	19-3488
Date:	OCT 2019
Designed By:	JAJ
Drafted By:	ACL
Checked By:	MDS

Revisions:

SHEET NO.

X OF X

PLOT DATE : 10/28/2019 3:47 PM
PLOT BY : JACOB JOYAL
FILE NAME : G:\FITCHBRG\18013-000\CIVIL3D\SHEETSPLAN\LIGHTING\KL_FHR_LTG_CD_CONTROL CABINET.DWG

GENERAL NOTES (APPLIES TO THIS CONSTRUCTION DETAIL)

DETAILS OF CONSTRUCTION, MATERIALS AND WORKMANSHIP NOT SHOWN ON THIS DRAWING SHALL CONFORM TO THE PERTINENT REQUIREMENTS OF THE STANDARD SPECIFICATIONS AND APPLICABLE SPECIAL PROVISIONS.

ALL INTERNAL ELECTRICAL COMPONENTS WILL BE PRE-WIRED BY THE CABINET FABRICATOR.

ALL CONDUIT ENTRIES SHALL BE SEALED WITH AN APPROPRIATE DUCT SEALING COMPOUND.

ORIENT PHOTOCELL AWAY FROM AMBIENT LIGHT SOURCES AND ONCOMING TRAFFIC HEADLIGHTS.

A COMPLETE LIGHTING OR ELECTRICAL PLAN SHALL BE SECURELY PLACED IN THE DOCUMENT HOLDER ATTACHED TO THE DOOR.

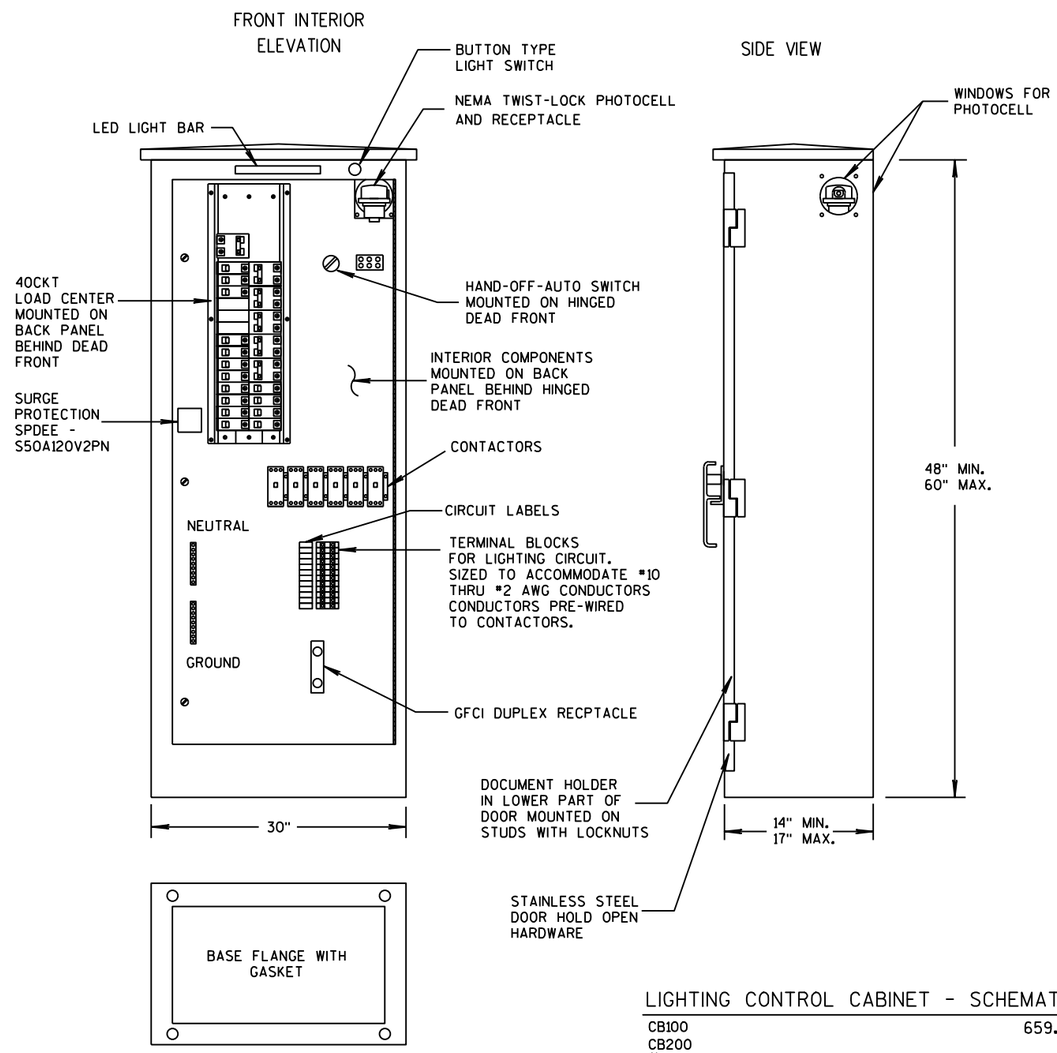

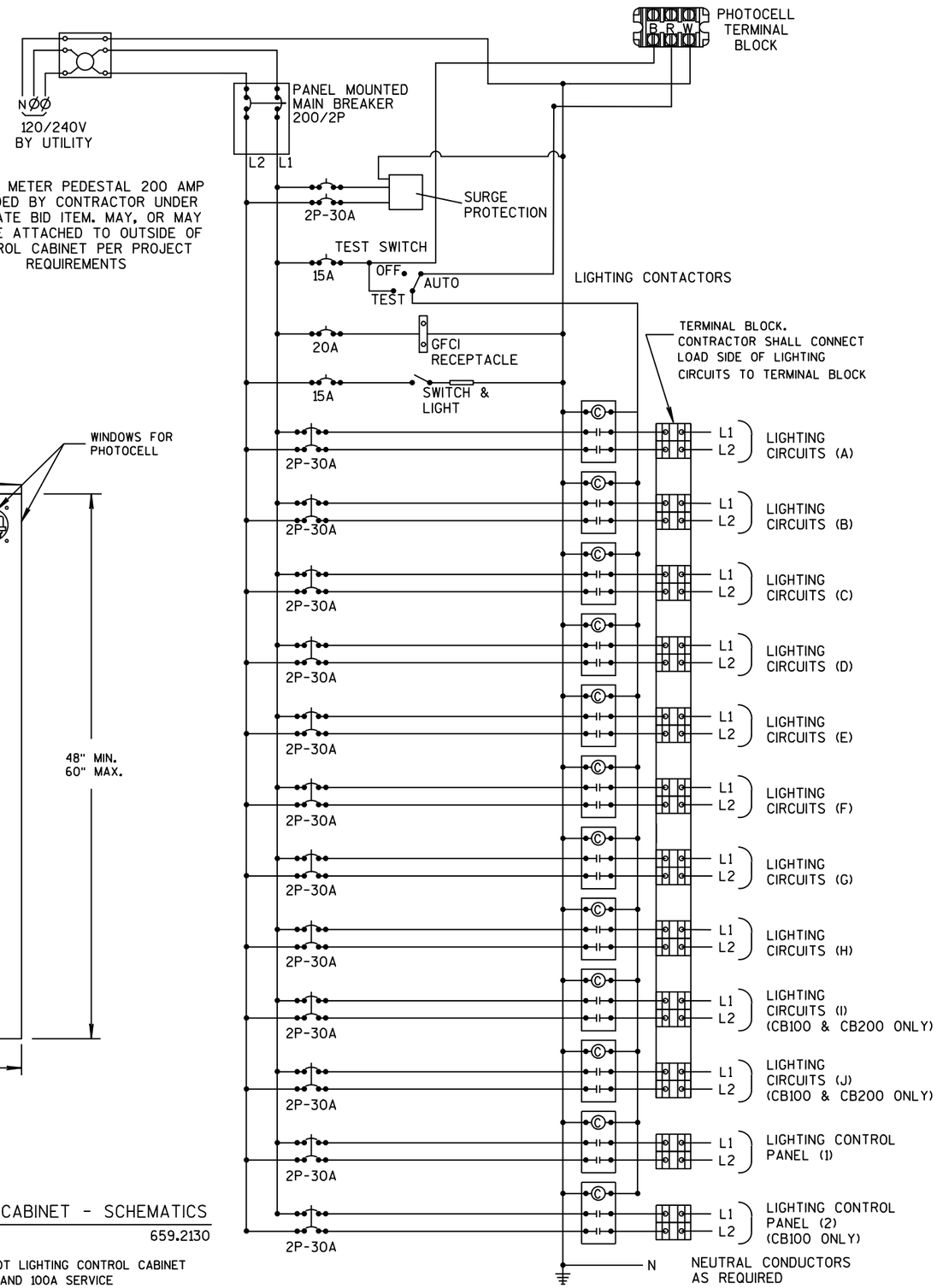

LIGHTING CONTROL CABINET - SCHEMATICS

CB100 659.2130
CB200
*CB300 - STANDARD WISDOT LIGHTING CONTROL CABINET WITH 30CKT LOAD CENTER AND 100A SERVICE

KL Engineering
[A] Better Experience
5400 King James Way
Suite 200
Madison, WI. 53719
Phone: (608) 663-1218
Phone: (800)-810-4012
http://klengineering.com
email@klengineering.com

CITY OF FITCHBURG

LIGHTING PLAN - DETAILS

Project No:	19-3488
Date:	OCT 2019
Designed By:	JAJ
Drafted By:	ACL
Checked By:	MDS

Revisions:

SHEET NO.

X OF X

PLOT DATE : 10/28/2019 3:51 PM
PLOT BY : JACOB JOYAL
FILE NAME : G:\FITCHBRG\180113-000\CIVIL3D\SHEETSPLAN\LIGHTING\KL_FHR_LTG_CD_HANDRAIL_DETAIL.DWG

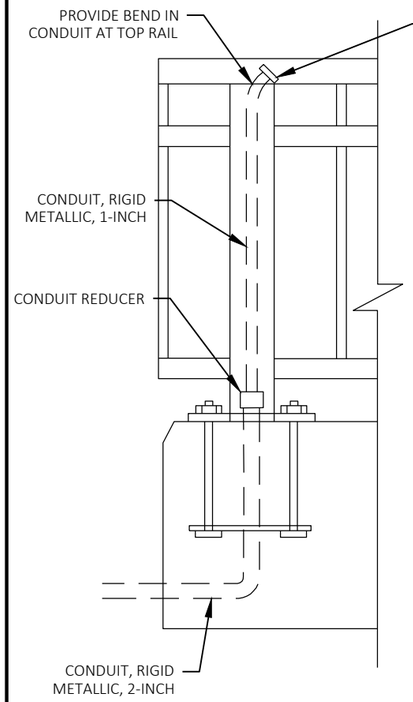

END POST DETAIL

NOTES:

1) ELECTRICAL CONTRACTOR SHALL COORDINATE WITH RAILING FABRICATOR TO CONFIRM HOLE SIZES IN RAILING MEMBERS AND VERIFY THE ELECTRICAL COMPONENTS WILL FIT PROPERLY.

2) ENSURE WIRING WILL NOT BE VISIBILE OR EASILY ACCESSIBLE OUT OF THE BOTTOM OF THE RAILING UPON COMPLETION.

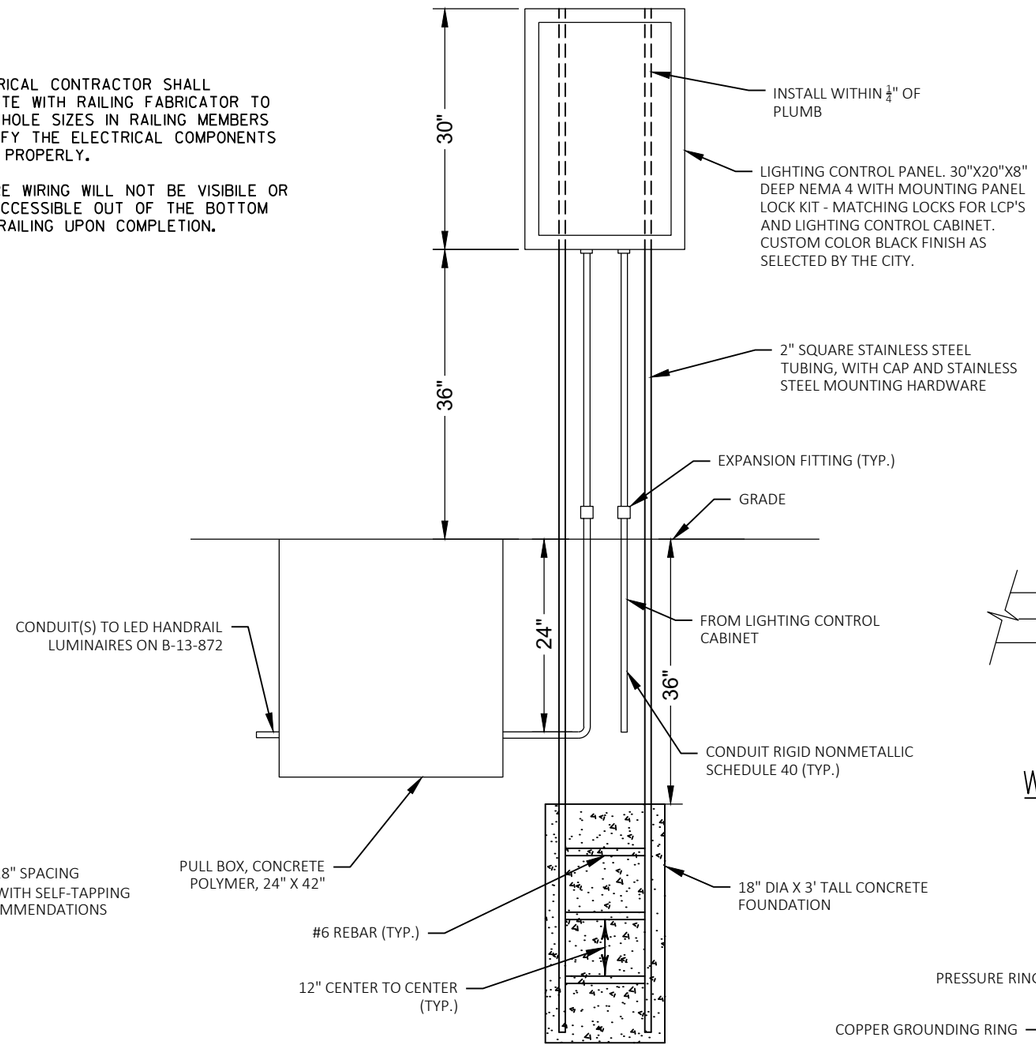

LIGHTING CONTROL PANEL MOUNTING DETAIL

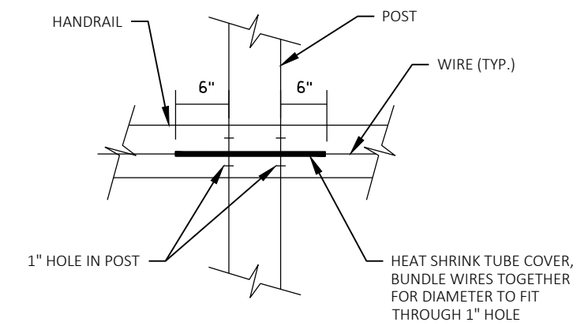

WIRING INSTALLATION AT POSTS

NOTE: BUNDLE WIRE WITH CABLE TIES EVERY 2'

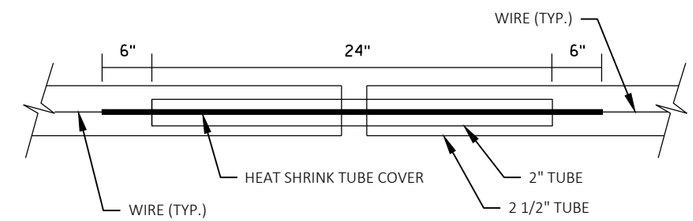

WIRING INSTALLATION AT HANDRAIL EXPANSION JOINT

NOTE: WIRE FOR 120V, AC POWER TO ALL LIGHT FIXTURES SHALL BE 600V XHHW

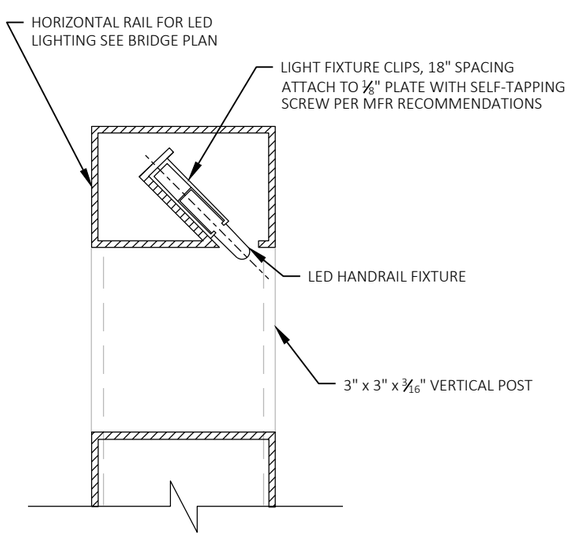

LED HANDRAIL MOUNTING DETAIL

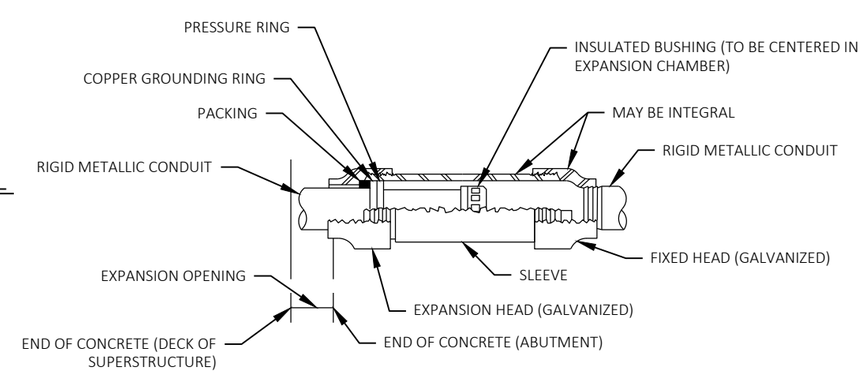

EXPANSION FITTING DETAIL

NOTE: INSTALL CONDUIT ON STAINLESS STEEL CHANNEL WITH STAINLESS STEEL ANCHORS TO OFFSET FITTING FROM STRUCTURE

KL Engineering
[A] Better Experience
5400 King James Way
Suite 200
Madison, WI. 53719
Phone: (608) 663-1218
Phone: (800)-810-4012
http://klengineering.com
email@klengineering.com

CITY OF FITCHBURG

LIGHTING PLAN - B-13-872

Project No:	19-3488
Date:	OCT 2019
Designed By:	JAJ
Drafted By:	ACL
Checked By:	MDS

Revisions:

SHEET NO.

X OF X

PLOT DATE : 10/28/2019 3:51 PM
PLOT BY : JACOB JOYAL
FILE NAME : G:\FITCHBRG\18013-000\CIVIL3D\SHEETSPLAN\LIGHTING\KL_FHR_LTG_CD_HANDRAIL_DETAIL.DWG

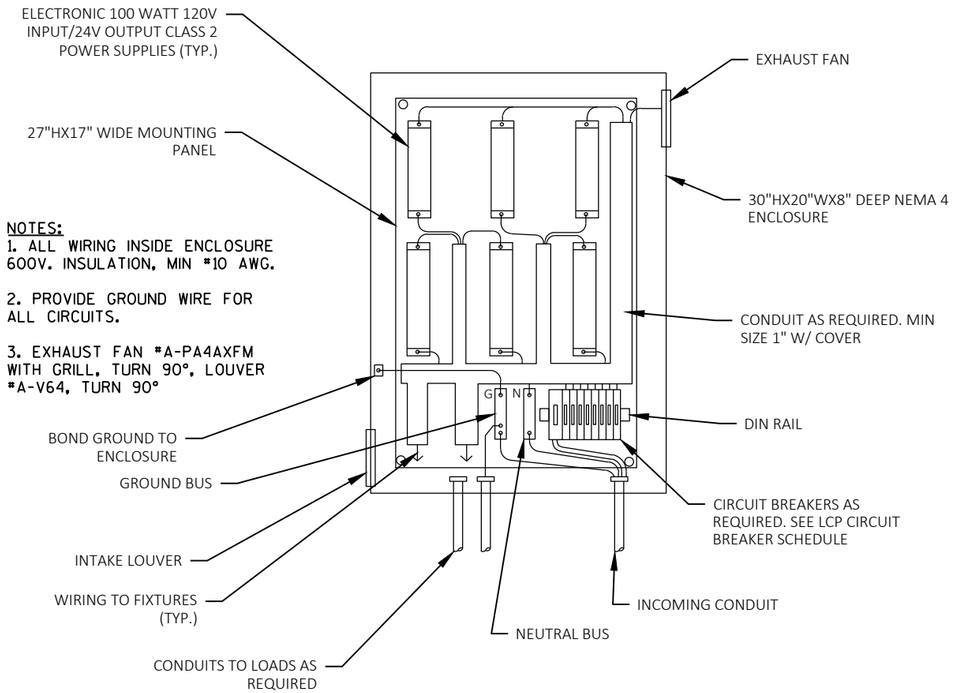

NOTES:
1. ALL WIRING INSIDE ENCLOSURE 600V. INSULATION, MIN #10 AWG.

2. PROVIDE GROUND WIRE FOR ALL CIRCUITS.

3. EXHAUST FAN #A-PA4AXFM WITH GRILL, TURN 90°, LOUVER #A-V64, TURN 90°

LIGHTING CONTROL PANEL EQUIPMENT DETAIL

LCP EQUIPMENT SCHEDULE

DESCRIPTION	MFGR.	CAT. NO.	REMARKS
DIN RAIL MOUNTED C/B 30A TWO POLES	TBD	TBD	MAIN BREAKER
DIN RAIL MOUNTED C/B 1.5A SINGLE POLE	TBD	TBD	LED HANDRAIL FIXTURE BREAKERS
DIN RAIL MOUNTED C/B 3A SINGLE POLE	TBD	TBD	EXHAUST FAN BREAKER
DIN RAIL FOR CIRCUIT BREAKERS	TBD	TBD	PROVIDE LENGTH FOR C/B'S INDICATED +3 SPARES
ELECTRONIC POWER SUPPLY FOR LED HANDRAIL FIXTURES	I LIGHT TECHNOLOGY	ADVANCE ADV-10024V	SUPPLY W/ LIGHT FIXTURE

NOTE:
ALL OTHER LCP EQUIPMENT CONSIDERED INCIDENTAL TO COMPLETE SYSTEM AND SHALL BE PROVIDED AS REQUIRED.

LCP CIRCUIT BREAKER SCHEDULE

LCP NO.	MAIN C/B	BRANCH CIRCUIT	BRANCH CIRCUIT C/B
1	30A	LED HANDRAIL FIXTURE POWER SUPPLY	1.5A
		LED HANDRAIL FIXTURE POWER SUPPLY	1.5A
		LED HANDRAIL FIXTURE POWER SUPPLY	1.5A
		LED HANDRAIL FIXTURE POWER SUPPLY	1.5A
		LED HANDRAIL FIXTURE POWER SUPPLY	1.5A
		LED HANDRAIL FIXTURE POWER SUPPLY	1.5A
		LED HANDRAIL FIXTURE POWER SUPPLY	1.5A
		LED HANDRAIL FIXTURE POWER SUPPLY	1.5A
		EXHAUST FAN	3A

KL Engineering
[A] Better Experience
5400 King James Way
Suite 200
Madison, WI. 53719
Phone: (608) 663-1218
Phone: (800)-810-4012
http://klengineering.com
email@klengineering.com

CITY OF FITCHBURG

LIGHTING PLAN - B-13-872

Project No: 19-3488
Date: OCT 2019
Designed By: JAJ
Drafted By: ACL
Checked By: MDS

Revisions:

SHEET NO.
X OF X

PLOT DATE : 10/28/2019 3:41 PM

PLOT BY : JACOB JOYAL

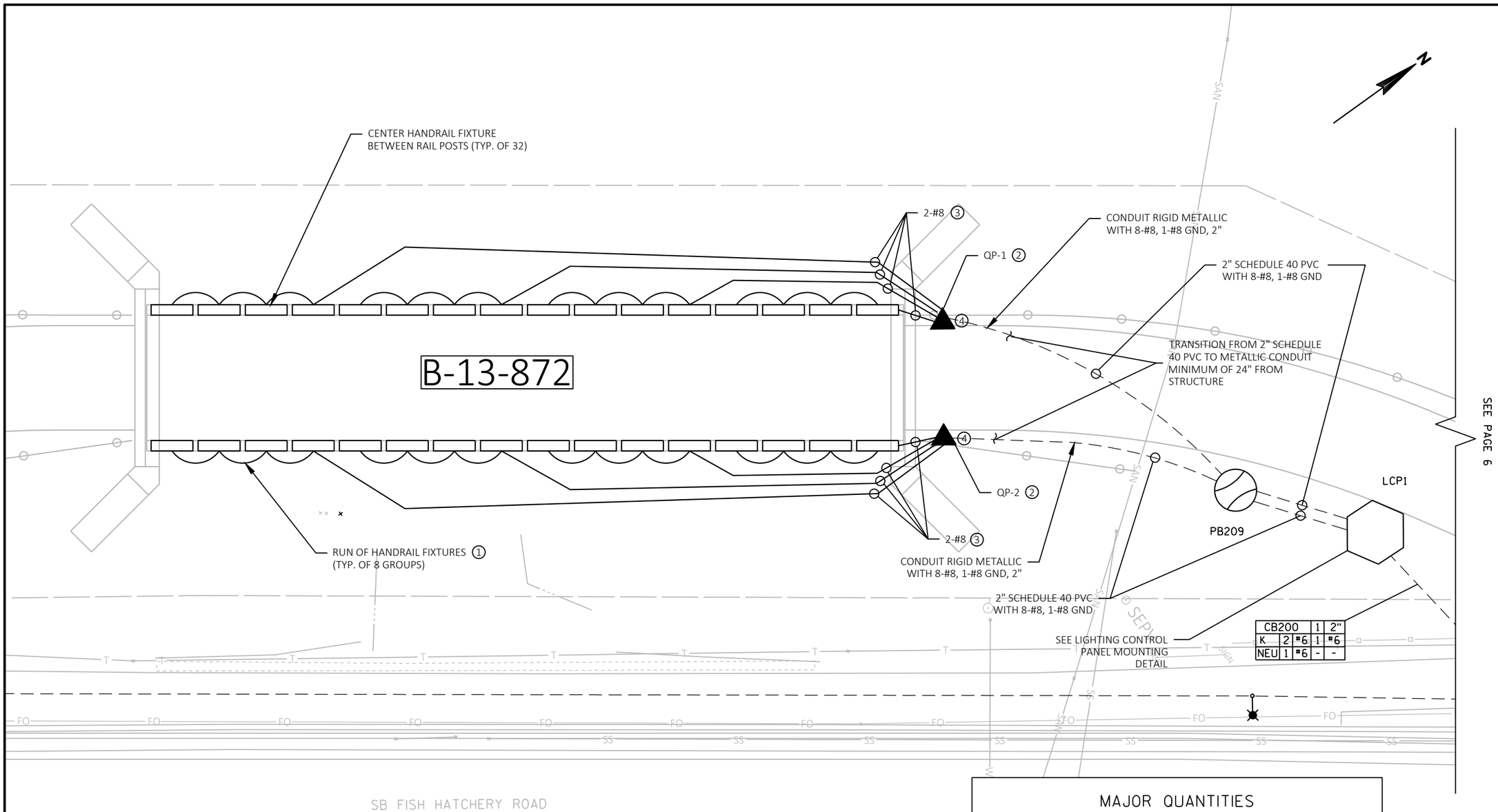

NOTES:

1. INSTALL LED HANDRAIL FIXTURES IN RUNS OF FOUR AS SHOWN. PROVIDE WIRES TO EACH RUN SIZE AS SHOWN.
2. INSTALL 2-#8 TO FIRST RUN OF HANDRAIL FIXTURE SEGMENTS. GROUND WIRE REQUIRED FOR ALL LIGHTING CIRCUITS.
3. INSTALL ALL WIRING THROUGH HANDRAIL. SEE LED HANDRAIL MOUNTING DETAIL.
4. INSTALL EXPANSION JOINT FITTING PER DETAIL

MAJOR QUANTITIES	
ITEM	B-13-872
ELECTRICAL WIRE #8 AWG	1000 LF
CONDUIT RIGID METALLIC 2"	40 LF
LED HANDRAIL FIXTURES	32 EA
LIGHTING CONTROL PANEL	1 EA

NOTE: ALL ITEMS LISTED ABOVE ARE TO BE PIAD FOR UNDER "FURNISH AND INSTALL LIGHTING ON STRUCTURE (B-13-872)(L.S.)"

KL Engineering
[A] Better Experience
5400 King James Way
Suite 200
Madison, WI. 53719
Phone: (608) 663-1218
Phone: (800)-810-4012
http://klengineering.com
email@klengineering.com

CITY OF FITCHBURG

LIGHTING PLAN - B-13-872

Project No:	19-3488
Date:	OCT 2019
Designed By:	JAJ
Drafted By:	ACL
Checked By:	MDS

Revisions:

SHEET NO.

X OF X

FILE NAME : G:\FITCHBRG\18013-000\CIVIL3D\SHEETSPLAN\LIGHTING\KL_FHR_LTG_CD_STRUCTURE.DWG

PLOT DATE : 10/28/2019 3:41 PM

PLOT BY : JACOB JOYAL

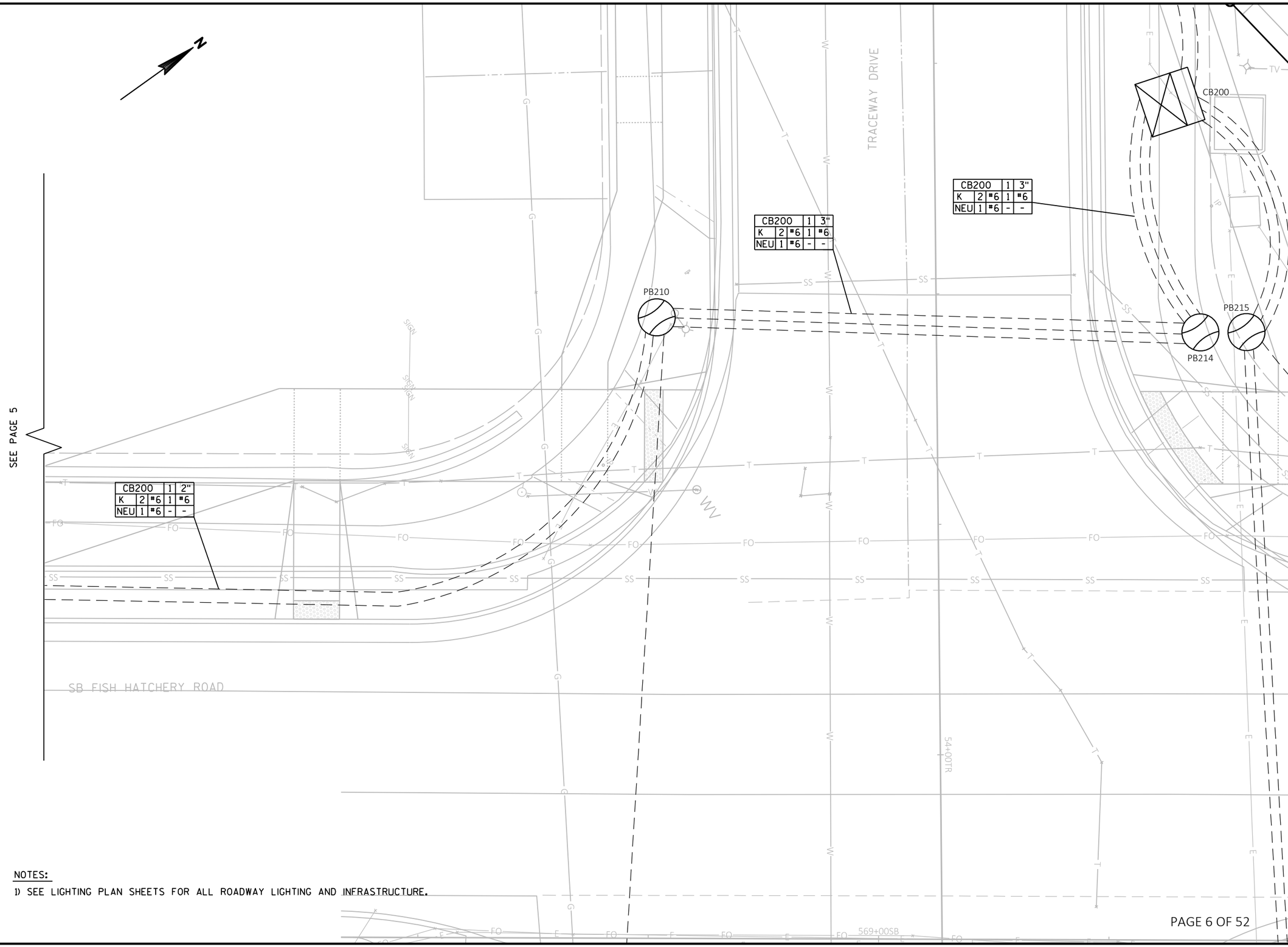

NOTES:

1) SEE LIGHTING PLAN SHEETS FOR ALL ROADWAY LIGHTING AND INFRASTRUCTURE.

KL Engineering
[A] Better Experience
5400 King James Way
Suite 200
Madison, WI. 53719
Phone: (608) 663-1218
Phone: (800)-810-4012
http://klengineering.com
email@klengineering.com

CITY OF FITCHBURG

LIGHTING PLAN - B-13-872

Project No:	19-3488
Date:	OCT 2019
Designed By:	JAJ
Drafted By:	ACL
Checked By:	MDS

Revisions:

SHEET NO.

X OF X

PLOT DATE : 10/28/2019 3:49 PM
PLOT BY : JACOB JOYAL
FILE NAME : G:\FITCHBRG\18013-000\CIVIL3D\SHEETSPLAN\LIGHTING\KL_FHR_LTG_CD_LIGHTS.DWG

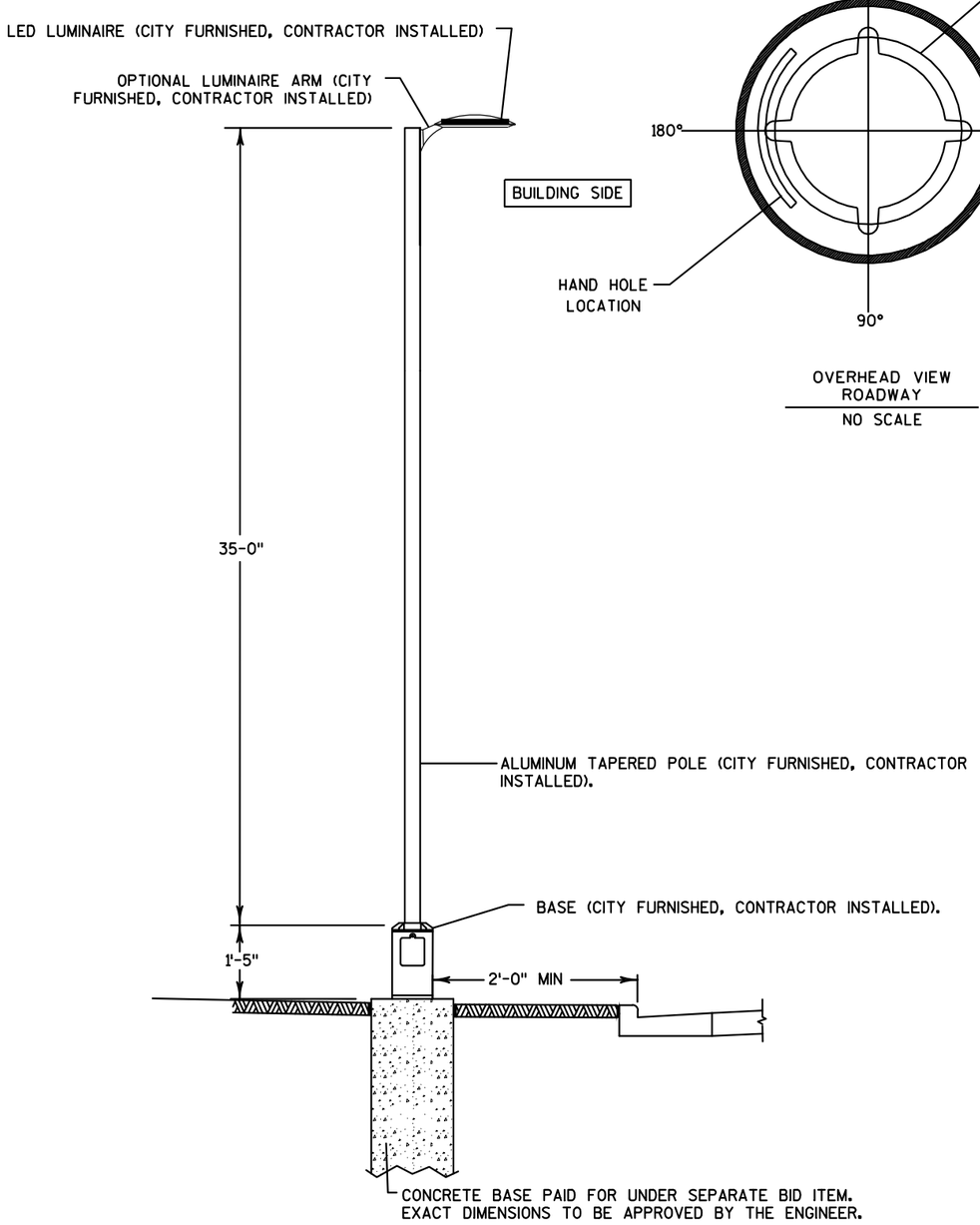

ROADWAY LIGHTING UNIT - TYPE 1
INSTALL NEW
-- NOT TO SCALE --

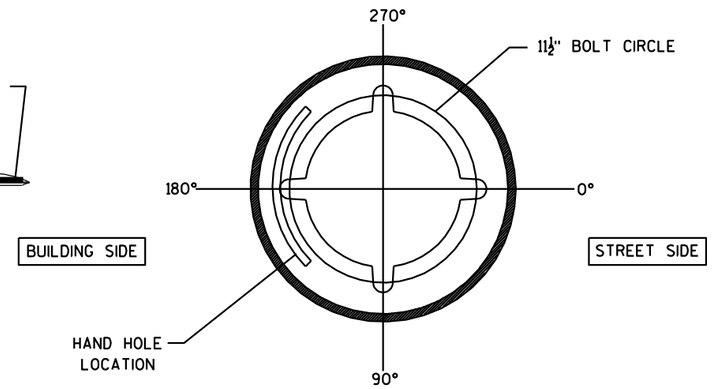

OVERHEAD VIEW
ROADWAY
NO SCALE

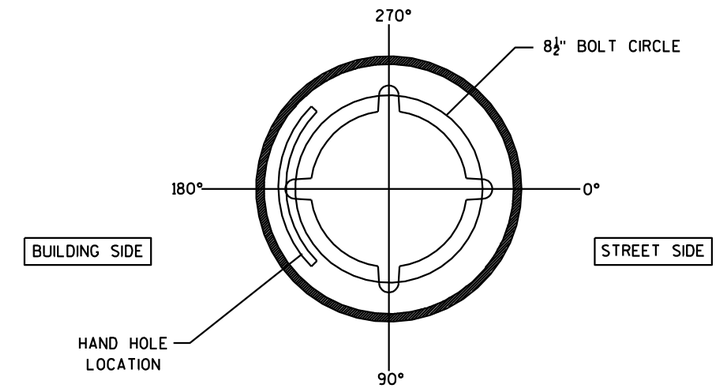

OVERHEAD VIEW
PEDESTRIAN
NO SCALE

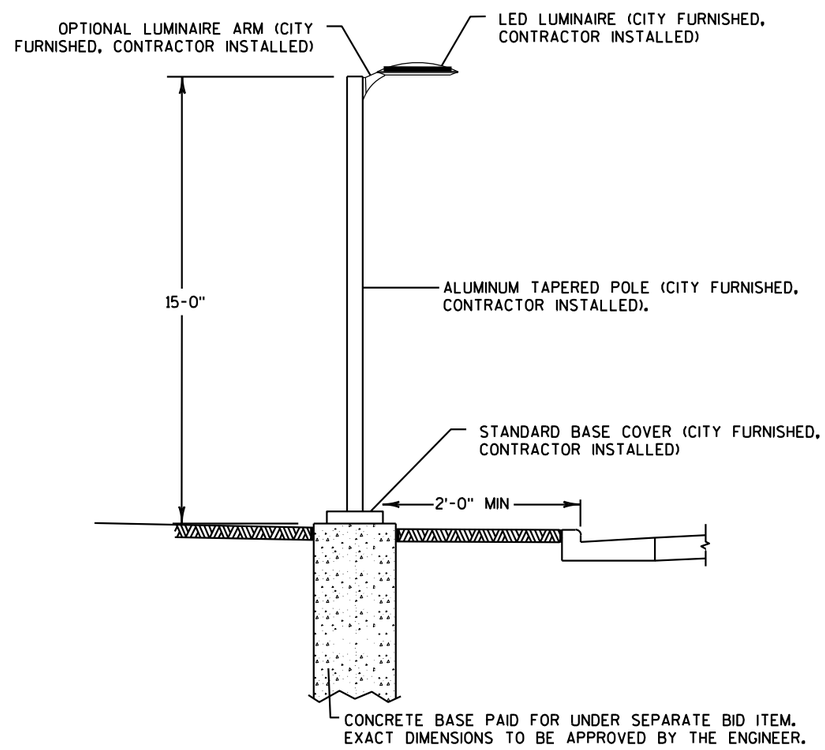

PEDESTRIAN LIGHTING UNIT
INSTALL NEW
-- NOT TO SCALE --

NOTES:

1) APPEARANCE OF ROADWAY AND PEDESTRIAN LIGHTING UNITS MAY NOT MATCH EXACTLY WHAT IS ASKED TO BE INSTALLED. DETAIL AS SHOWN MAY BE USED TO REPRESENT REQUIRED WORK FOR BIDDING PURPOSES.
2) CONCRETE BASES MAY REQUIRE A COVER SHROUD, INSTALLATION AND REMOVAL OF WHICH SHALL BE INCIDENTAL TO THE TRANSPORT AND INSTALL LIGHTING BASE, POLE AND LUMINAIRE BID ITEM.
3) MAKE AND MODEL OF ROADWAY LIGHTING UNIT - TYPE 2 IS DESCRIBED IN THE SPECIAL PROVISIONS

KL Engineering
[A] Better Experience
5400 King James Way
Suite 200
Madison, WI. 53719
Phone: (608) 663-1218
Phone: (800)-810-4012
http://klengineering.com
email@klengineering.com

CITY OF FITCHBURG

LIGHTING PLAN - DETAILS

Project No:	19-3488
Date:	OCT 2019
Designed By:	JAJ
Drafted By:	ACL
Checked By:	MDS

Revisions:

SHEET NO.

X OF X

PLOT DATE : 10/28/2019 3:55 PM

PLOT BY : JACOB JOYAL

FILE NAME : G:\FITCHBRG\18013-000\CIVIL3D\SHEETSPLAN\LIGHTING\KL_FHR_LTG_CD_TEMP.DWG

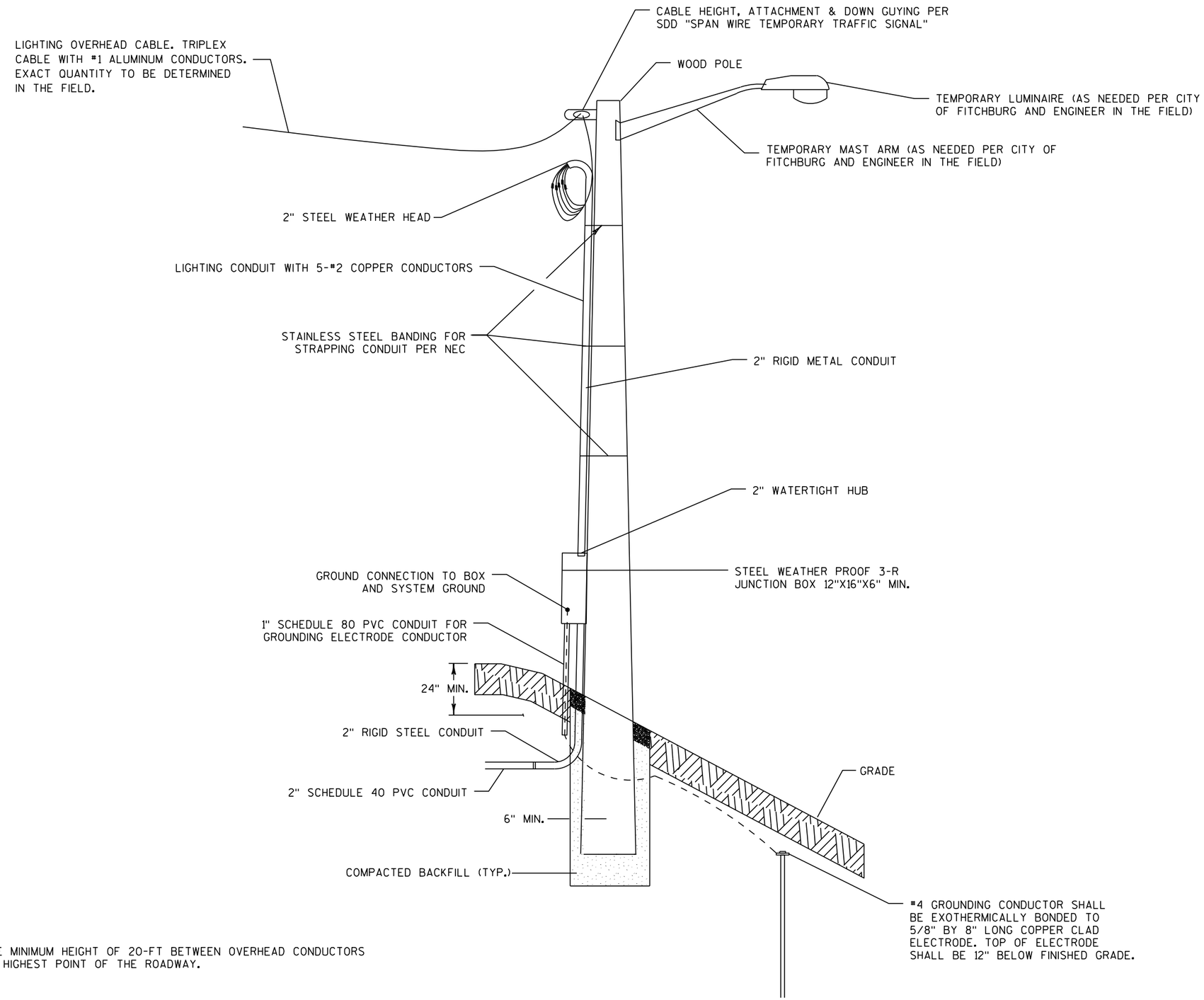

NOTE:

1) ENSURE MINIMUM HEIGHT OF 20-FT BETWEEN OVERHEAD CONDUCTORS AND THE HIGHEST POINT OF THE ROADWAY.

TEMPORARY AERIAL CABLE

NOT TO SCALE 1004.02

TEMPORARY WOOD POLES FOR LIGHTING

NOT TO SCALE 1004.00

TEMPORARY LUMINAIRES AND ARMS

NOT TO SCALE 1004.01

KL Engineering
[A] Better Experience
5400 King James Way
Suite 200
Madison, WI. 53719
Phone: (608) 663-1218
Phone: (800)-810-4012
http://klengineering.com
email@klengineering.com

CITY OF FITCHBURG

LIGHTING PLAN - DETAILS

Project No:	19-3488
Date:	OCT 2019
Designed By:	JAJ
Drafted By:	ACL
Checked By:	MDS

Revisions:

SHEET NO.

X OF X

PLOT DATE : 10/28/2019 3:20 PM

PLOT BY : JACOB JOYAL

FILE NAME : G:\FITCHBRG\18013-000\CIVIL3D\SHEETSPLAN\LIGHTING\KL_FHR_LTG_PROP.DWG

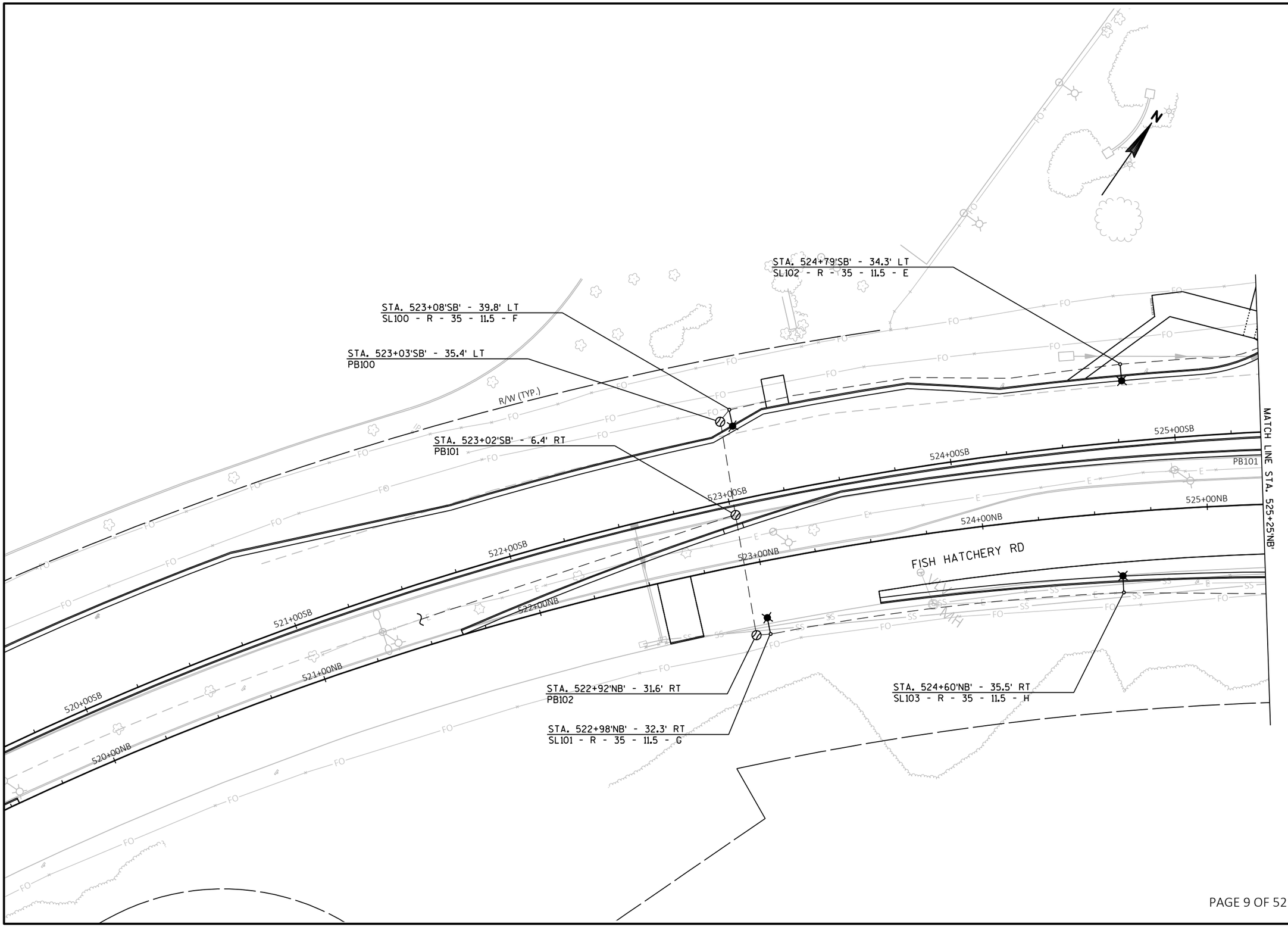

KL Engineering
[A] Better Experience
5400 King James Way
Suite 200
Madison, WI. 53719
Phone: (608) 663-1218
Phone: (800)-810-4012
http://klengineering.com
email@klengineering.com

CITY OF FITCHBURG

LIGHTING PLAN

Project No:	19-3488
Date:	OCT 2019
Designed By:	JAJ
Drafted By:	ACL
Checked By:	MDS

Revisions:

SHEET NO.

X OF X

PLOT DATE : 10/28/2019 3:34 PM

PLOT BY : JACOB JOYAL

FILE NAME : G:\FITCHBRG\18013-000\CIVIL3D\SHEETSPLAN\LIGHTING\KL_FHR_LTG_PROP - A.DWG

E_1 =

CB100	1	2"
E 2 #6	1 #6	
F 2 #6	-	-

F_1 =

CB100	1	3"
E 2 #6	1 #6	
F 2 #6	-	-

G_1 =

CB100	1	2"
G 2 #6	1 #6	
H 2 #6	-	-

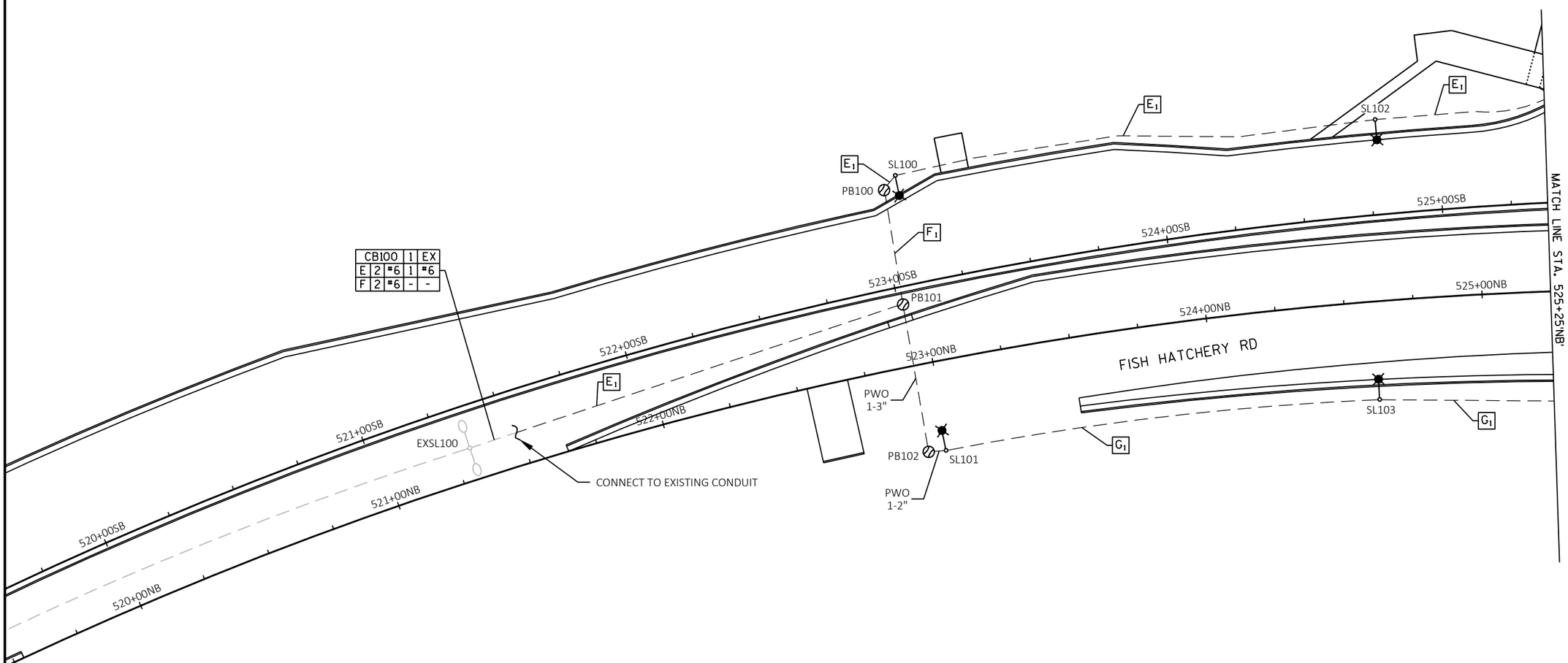

NOTES:

1) FIELD VERIFY EXISTING CONDITIONS OF LIGHTING ON FISH HATCHERY RD SOUTH OF THE PROJECT. PLAN CIRCUITING MAY BE ALTERED AT THIS LOCATION TO ENSURE SUCCESSFUL RE-CONNECTION TO EXISTING LIGHTING.

2) CIRCUITS E AND F SHALL TERMINATE AT LAST TWIN FIXTURE IN LINE UNLESS INSTRUCTED OTHERWISE BY THE FIELD ENGINEER.

KL Engineering
[A] Better Experience
5400 King James Way
Suite 200
Madison, WI. 53719
Phone: (608) 663-1218
Phone: (800)-810-4012
http://klengineering.com
email@klengineering.com

CITY OF FITCHBURG

LIGHTING PLAN

Project No:	19-3488
Date:	OCT 2019
Designed By:	JAJ
Drafted By:	ACL
Checked By:	MDS

Revisions:

SHEET NO.

X OF X

PLOT DATE : 10/28/2019 3:20 PM

PLOT BY : JACOB JOYAL

FILE NAME : G:\FITCHBRG\18013-000\CIVIL3D\SHEETSPLAN\LIGHTING\KL_FHR_LTG_PROP.DWG

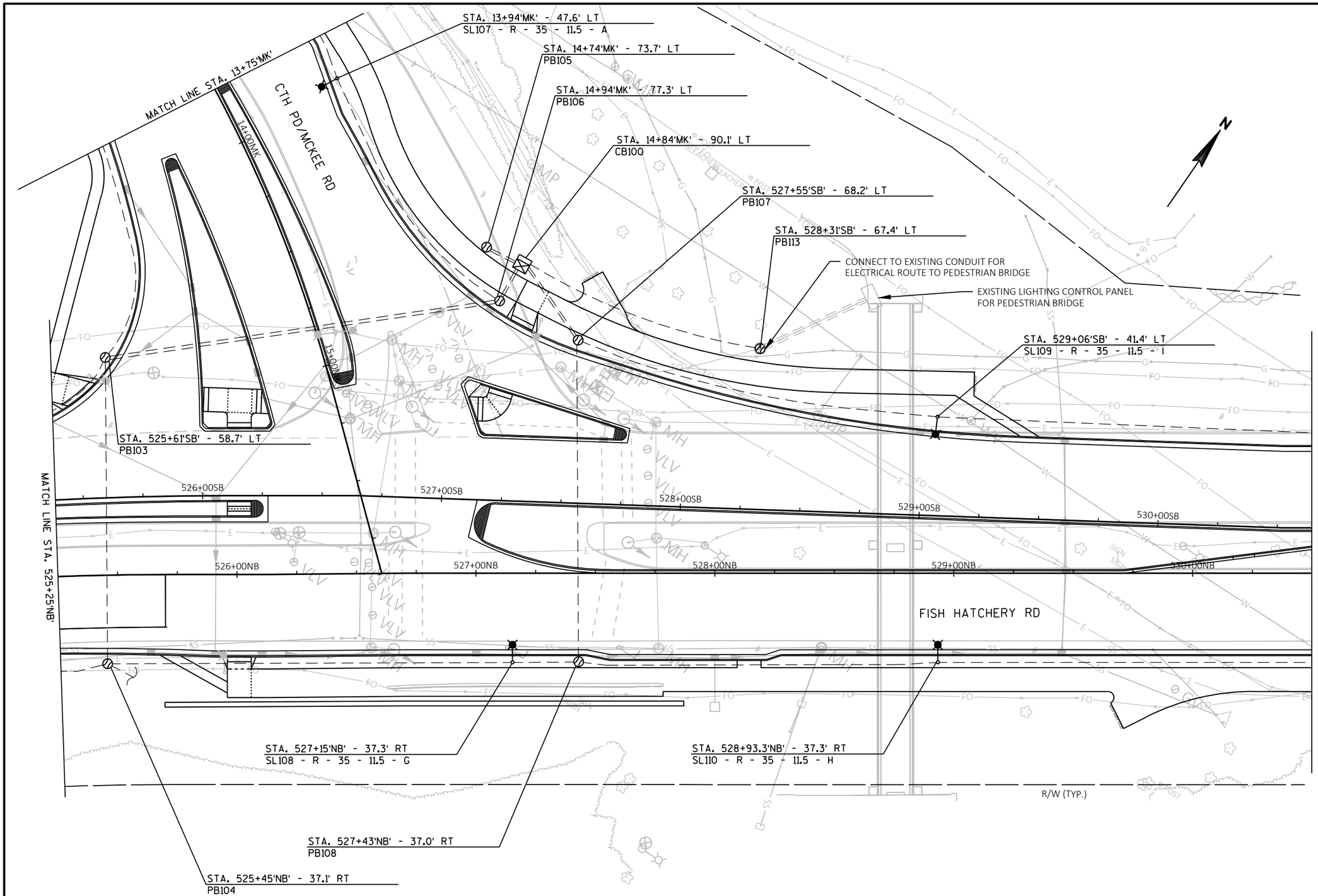

NOTES:

1) SEE SIGNAL PLANS FOR ALL LIGHTING WITH SHARED INFRASTRUCTURE.

KL Engineering
[A] Better Experience
5400 King James Way
Suite 200
Madison, WI. 53719
Phone: (608) 663-1218
Phone: (800)-810-4012
http://klengineering.com
email@klengineering.com

CITY OF FITCHBURG

LIGHTING PLAN

Project No:	19-3488
Date:	OCT 2019
Designed By:	JAJ
Drafted By:	ACL
Checked By:	MDS

Revisions:

SHEET NO.

X OF X

PLOT DATE : 10/28/2019 3:34 PM

PLOT BY : JACOB JOYAL

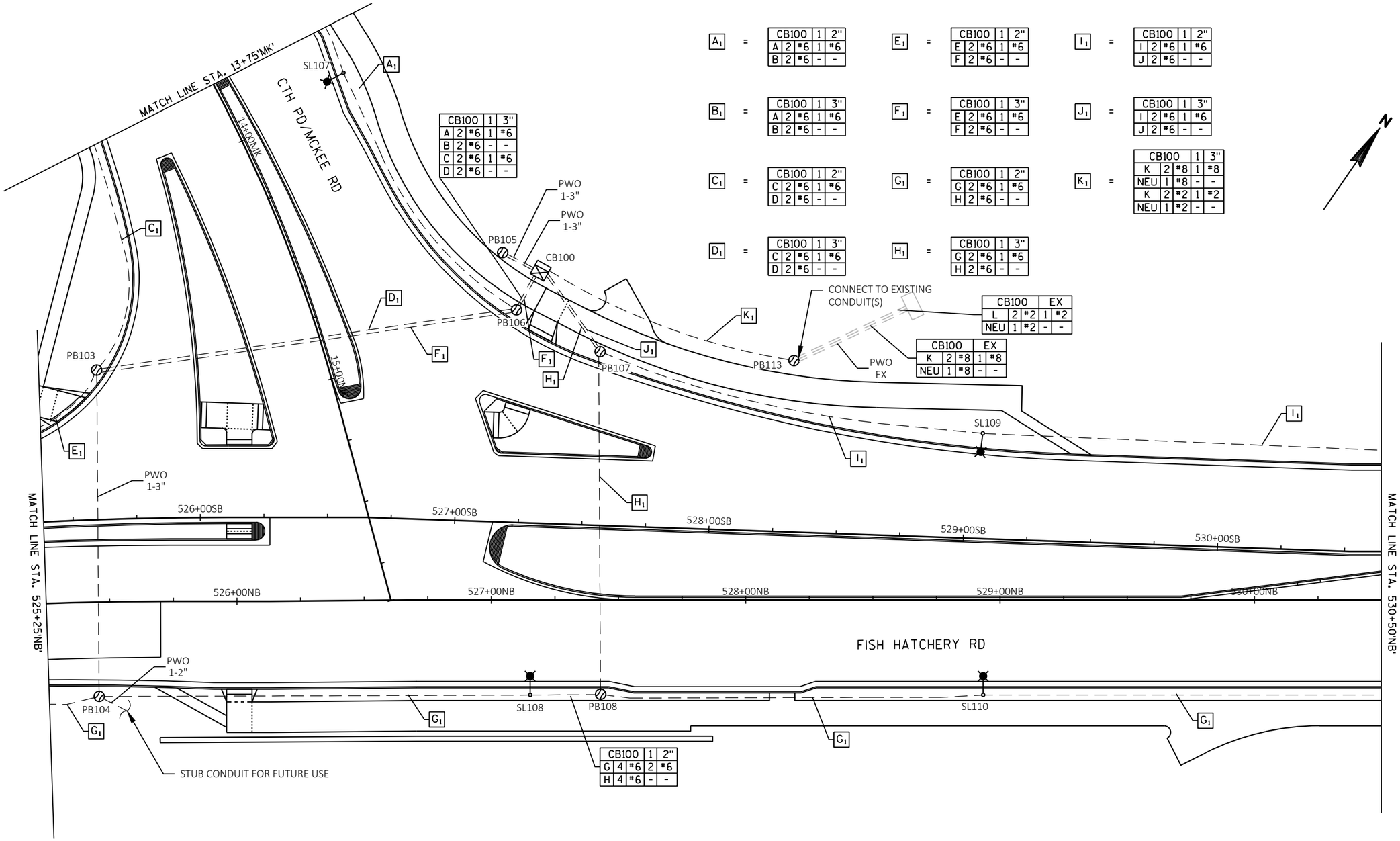

A1 =	CB100	1	2"		
	A	2	#6	1	#6
	B	2	#6	-	-
B1 =	CB100	1	3"		
	A	2	#6	1	#6
	B	2	#6	-	-
C1 =	CB100	1	2"		
	C	2	#6	1	#6
	D	2	#6	-	-
D1 =	CB100	1	3"		
	C	2	#6	1	#6
	D	2	#6	-	-
E1 =	CB100	1	2"		
	E	2	#6	1	#6
	F	2	#6	-	-
F1 =	CB100	1	3"		
	E	2	#6	1	#6
	F	2	#6	-	-
G1 =	CB100	1	2"		
	G	2	#6	1	#6
	H	2	#6	-	-
H1 =	CB100	1	3"		
	G	2	#6	1	#6
	H	2	#6	-	-
I1 =	CB100	1	2"		
	I	2	#6	1	#6
	J	2	#6	-	-
J1 =	CB100	1	3"		
	I	2	#6	1	#6
	J	2	#6	-	-
K1 =	CB100	1	3"		
	K	2	#8	1	#8
	NEU	1	#8	-	-
	K	2	#2	1	#2
	NEU	1	#2	-	-

CB100			EX	
L	2	#2	1	#2
NEU	1	#2	-	-

CB100			EX	
K	2	#8	1	#8
NEU	1	#8	-	-

CB100			1	2"
G	4	#6	2	#6
H	4	#6	-	-

NOTES:

1) FIELD VERIFY EXISTING CONDITIONS FOR BRIDGE LIGHTING. PLAN CIRCUITING MAY BE ADJUSTED AT THIS LOCATION TO ENSURE SUCCESSFUL RE-CONNECTION TO EXISTING LIGHTING.

2) CIRCUIT K SHALL ROUTE THROUGH EXISTING PULL BOX TO RE-ESTABLISH POWER TO THE PEDESTRIAN BRIDGE.

KL Engineering
[A] Better Experience
5400 King James Way
Suite 200
Madison, WI. 53719
Phone: (608) 663-1218
Phone: (800)-810-4012
http://klengineering.com
email@klengineering.com

CITY OF FITCHBURG

LIGHTING PLAN

Project No:	19-3488
Date:	OCT 2019
Designed By:	JAJ
Drafted By:	ACL
Checked By:	MDS

Revisions:

SHEET NO.

X OF X

FILE NAME : G:\FITCHBRG\18013-000\CIVIL3D\SHEETSPLAN\LIGHTING\KL_FHR_LTG_PROP - A.DWG

PLOT DATE : 10/28/2019 3:21 PM

PLOT BY : JACOB JOYAL

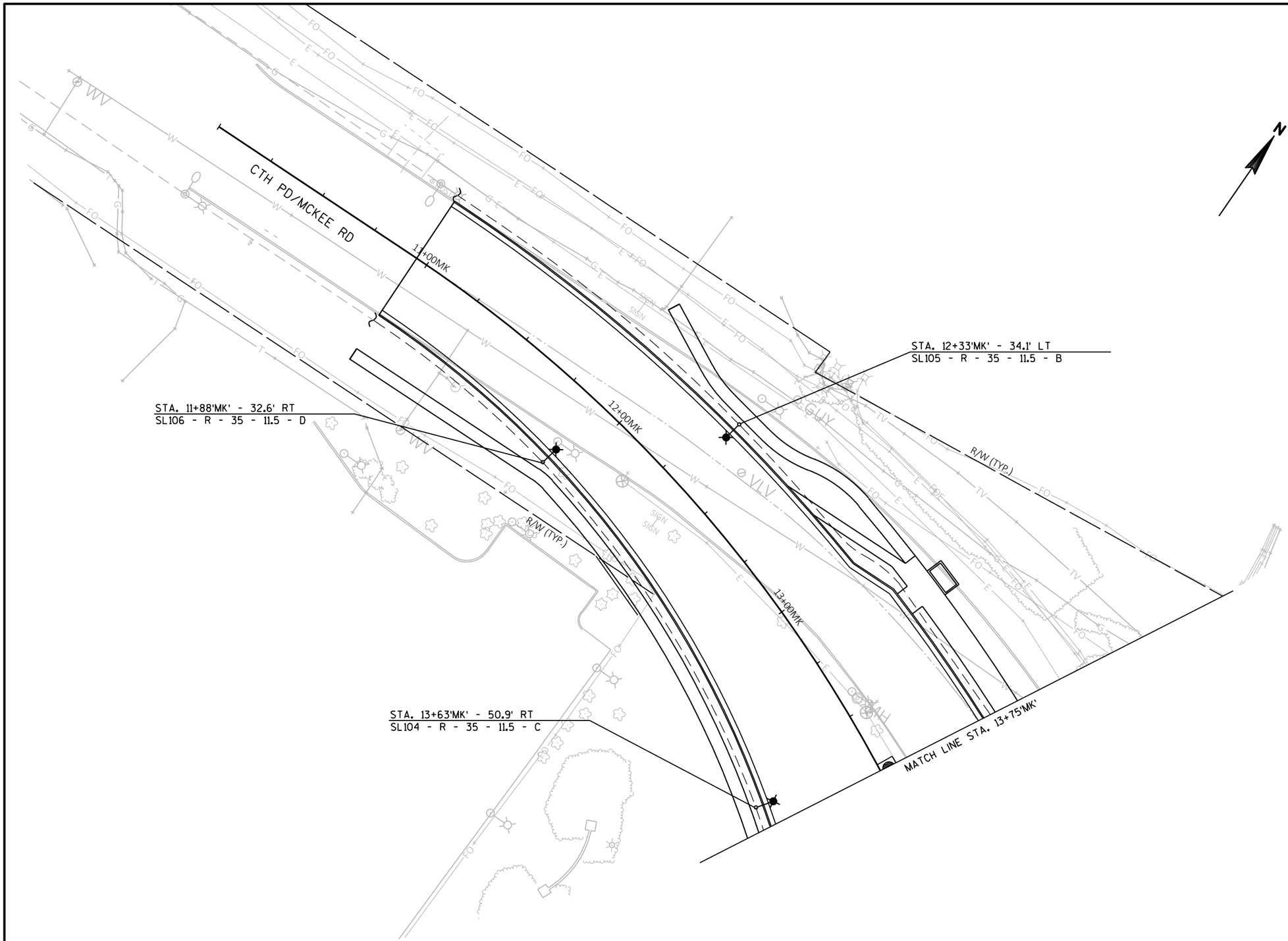

KL Engineering
[A] Better Experience
5400 King James Way
Suite 200
Madison, WI. 53719
Phone: (608) 663-1218
Phone: (800)-810-4012
http://klengineering.com
email@klengineering.com

CITY OF FITCHBURG

LIGHTING PLAN

Project No:	19-3488
Date:	OCT 2019
Designed By:	JAJ
Drafted By:	ACL
Checked By:	MDS

Revisions:

SHEET NO.

X OF X

FILE NAME : G:\FITCHBRG\18013-000\CIVIL3D\SHEETSPLAN\LIGHTING\KL_FHR_LTG_PROP.DWG

PLOT DATE : 10/28/2019 3:35 PM

PLOT BY : JACOB JOYAL

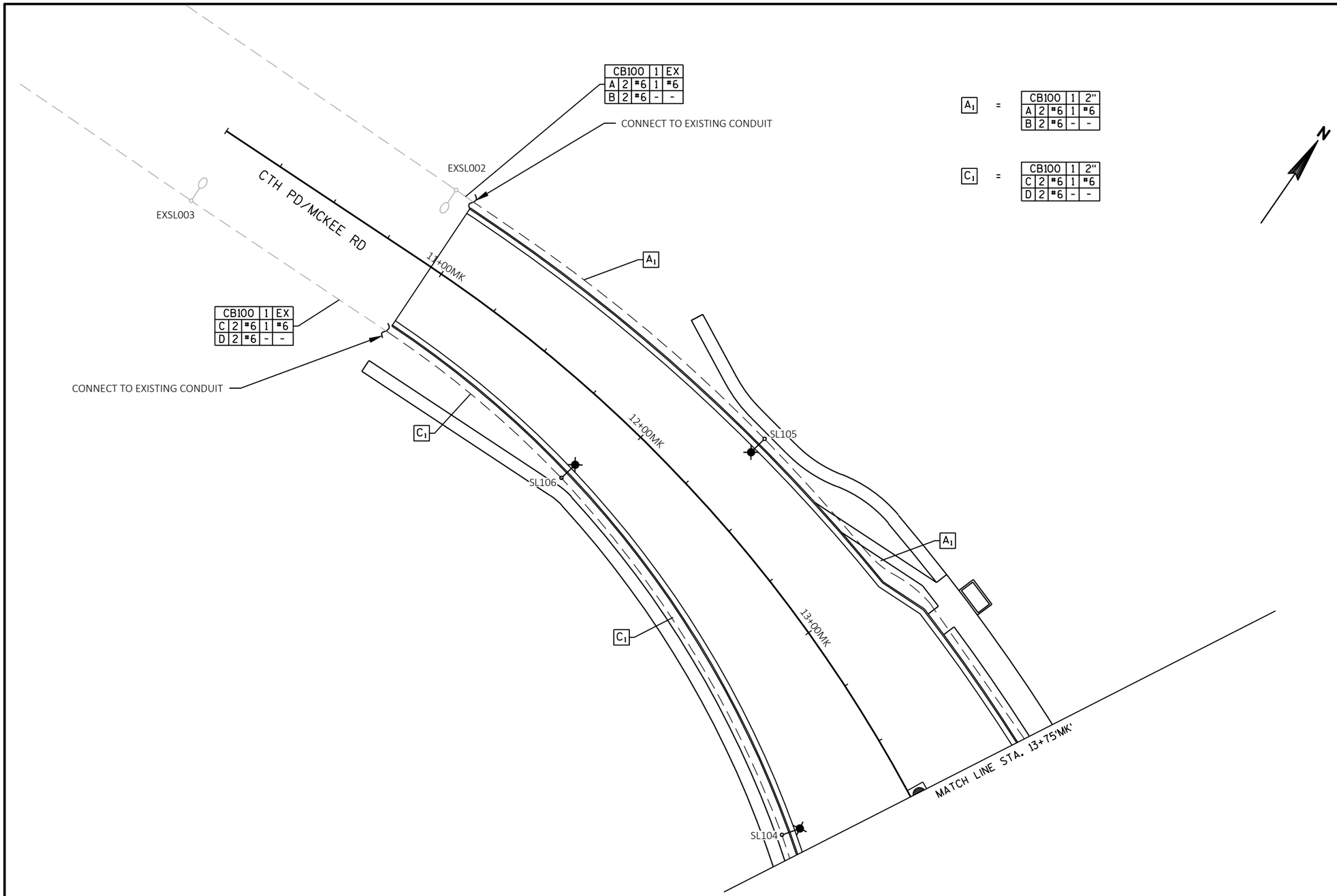

A1 = CB100 | 1 | 2"
A | 2 | #6 | 1 | #6
B | 2 | #6 | - | -

C1 = CB100 | 1 | 2"
C | 2 | #6 | 1 | #6
D | 2 | #6 | - | -

NOTES:

1) FIELD VERIFY EXISTING CONDITIONS OF LIGHTING ON CTH PD/MCKEE RD. PLAN CIRCUITING MAY BE ALTERED AT THIS LOCATION TO ENSURE SUCCESSFUL RE-CONNECTION TO EXISTING LIGHTING.

2) CIRCUITS C AND D SHALL TERMINATE AT LAST SINGLE ARM LIGHTING FIXTURE ON SOUTH SIDE OF CTH PD/MCKEE RD UNLESS INSTRUCTED OTHERWISE BY THE FIELD ENGINEER.

3) CIRCUITS A AND B SHALL EXTEND TO MEDIAN LIGHTING FROM NORTH SIDE OF CTH PD/MCKEE RD AND TERMINATE AT LAST TWIN FIXTURE IN LINE UNLESS INSTRUCTED OTHERWISE BY THE FIELD ENGINEER.

KL Engineering
[A] Better Experience
5400 King James Way
Suite 200
Madison, WI. 53719
Phone: (608) 663-1218
Phone: (800)-810-4012
http://klengineering.com
email@klengineering.com

CITY OF FITCHBURG

LIGHTING PLAN

Project No:	19-3488
Date:	OCT 2019
Designed By:	JAJ
Drafted By:	ACL
Checked By:	MDS

Revisions:

SHEET NO.

X OF X

FILE NAME : G:\FITCHBRG\18013-000\CIVIL3D\SHEETSPLAN\LIGHTING\KL_FHR_LTG_PROP - A.DWG

PLOT DATE : 10/28/2019 3:21 PM
PLOT BY : JACOB JOYAL

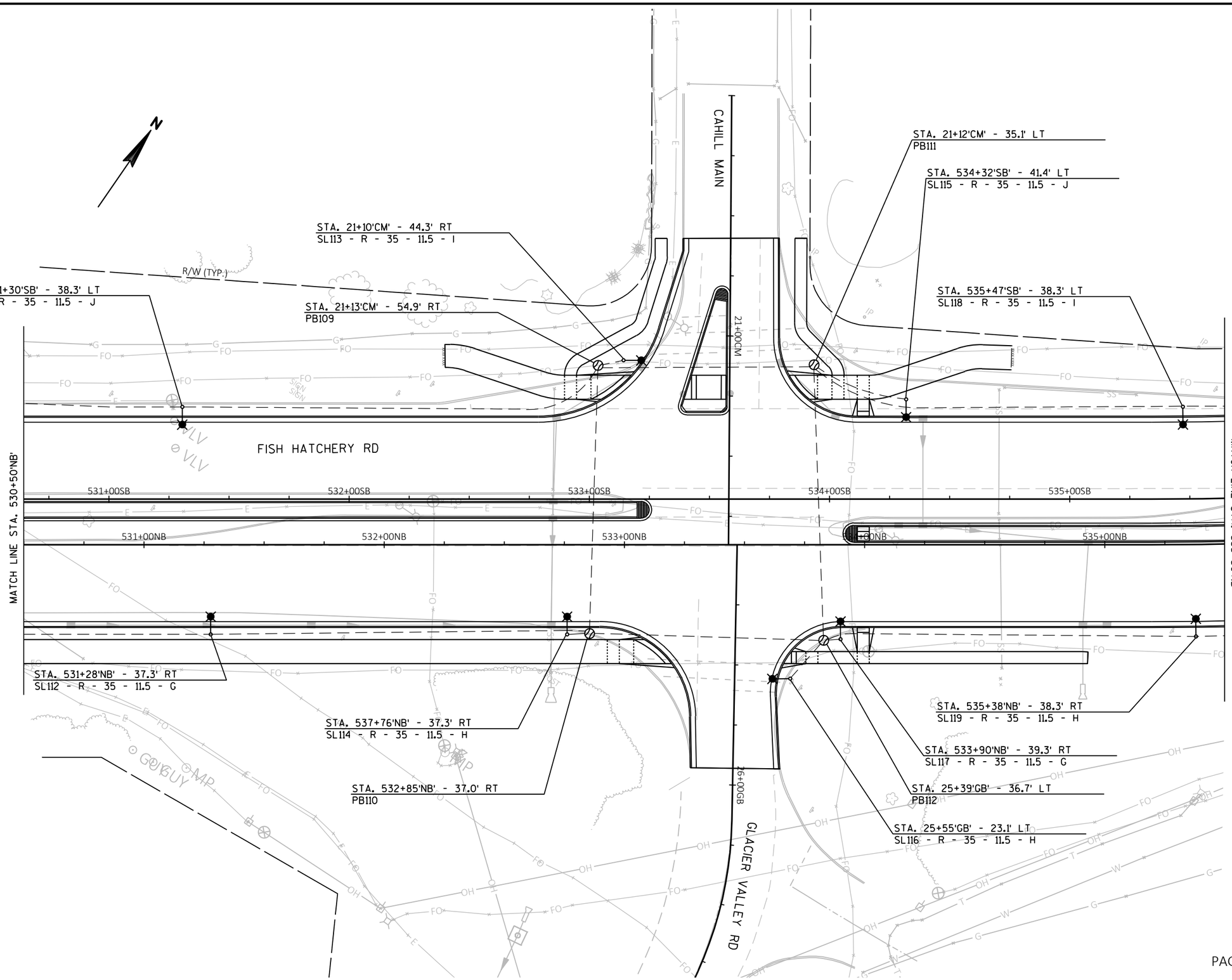

KL Engineering
[A] Better Experience
5400 King James Way
Suite 200
Madison, WI. 53719
Phone: (608) 663-1218
Phone: (800)-810-4012
http://klengineering.com
email@klengineering.com

CITY OF FITCHBURG

LIGHTING PLAN

Project No:	19-3488
Date:	OCT 2019
Designed By:	JAJ
Drafted By:	ACL
Checked By:	MDS

Revisions:

SHEET NO.

X OF X

FILE NAME : G:\FITCHBRG\18013-000\CIVIL3D\SHEETSPLAN\LIGHTING\KL_FHR_LTG_PROP.DWG

PLOT DATE : 10/28/2019 3:35 PM

PLOT BY : JACOB JOYAL

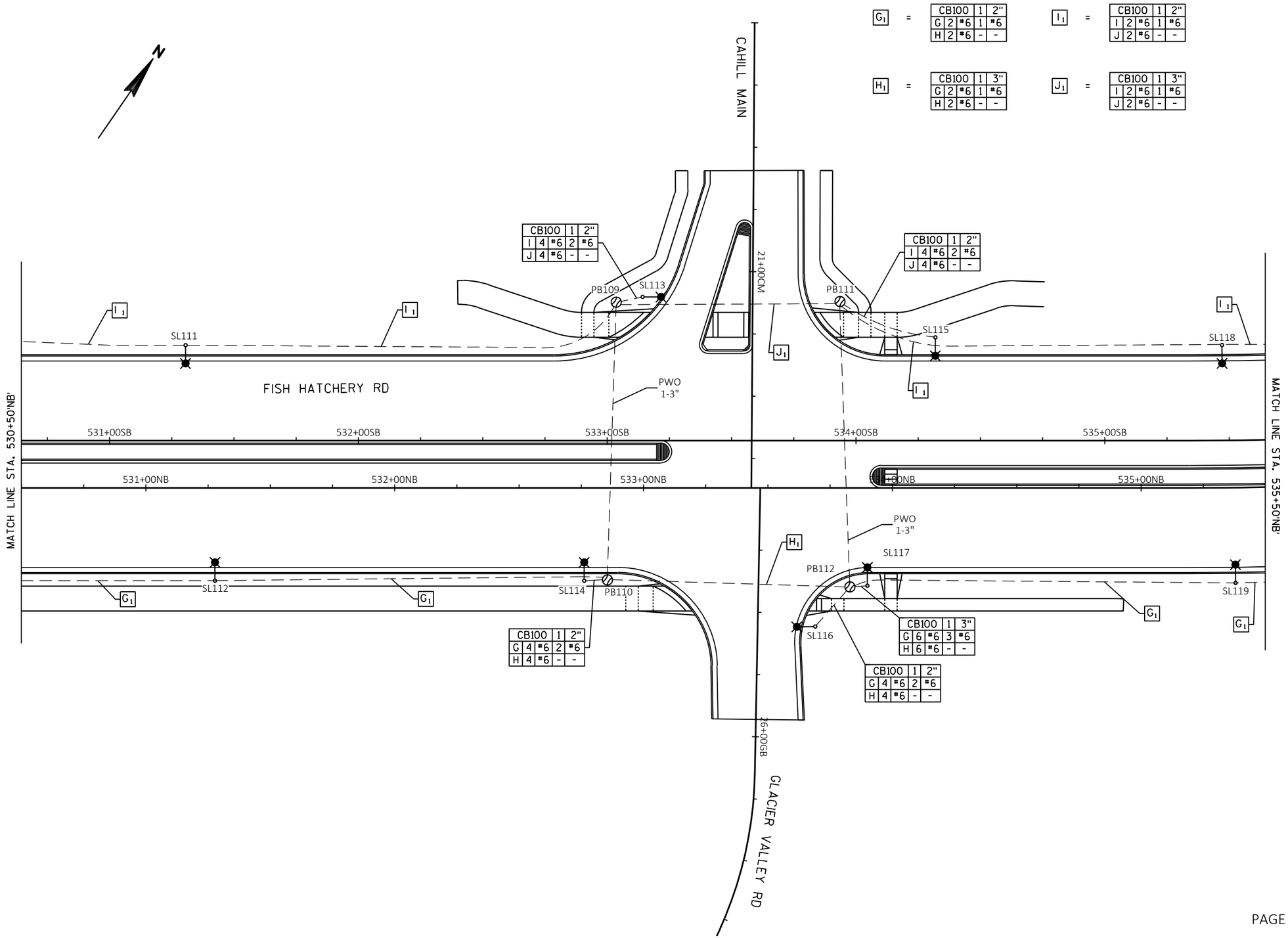

KL Engineering
[A] Better Experience
5400 King James Way
Suite 200
Madison, WI. 53719
Phone: (608) 663-1218
Phone: (800)-810-4012
http://klengineering.com
email@klengineering.com

CITY OF FITCHBURG

LIGHTING PLAN

Project No:	19-3488
Date:	OCT 2019
Designed By:	JAJ
Drafted By:	ACL
Checked By:	MDS

Revisions:

SHEET NO.

X OF X

FILE NAME : G:\FITCHBRG\18013-000\CIVIL3D\SHEETSPLAN\LIGHTING\KL_FHR_LTG_PROP - A.DWG

PLOT DATE : 10/28/2019 3:22 PM
PLOT BY : JACOB JOYAL
FILE NAME : G:\FITCHBRG\18013-000\CIVIL3D\SHEETSPLAN\LIGHTING\KL_FHR_LTG_PROP.DWG

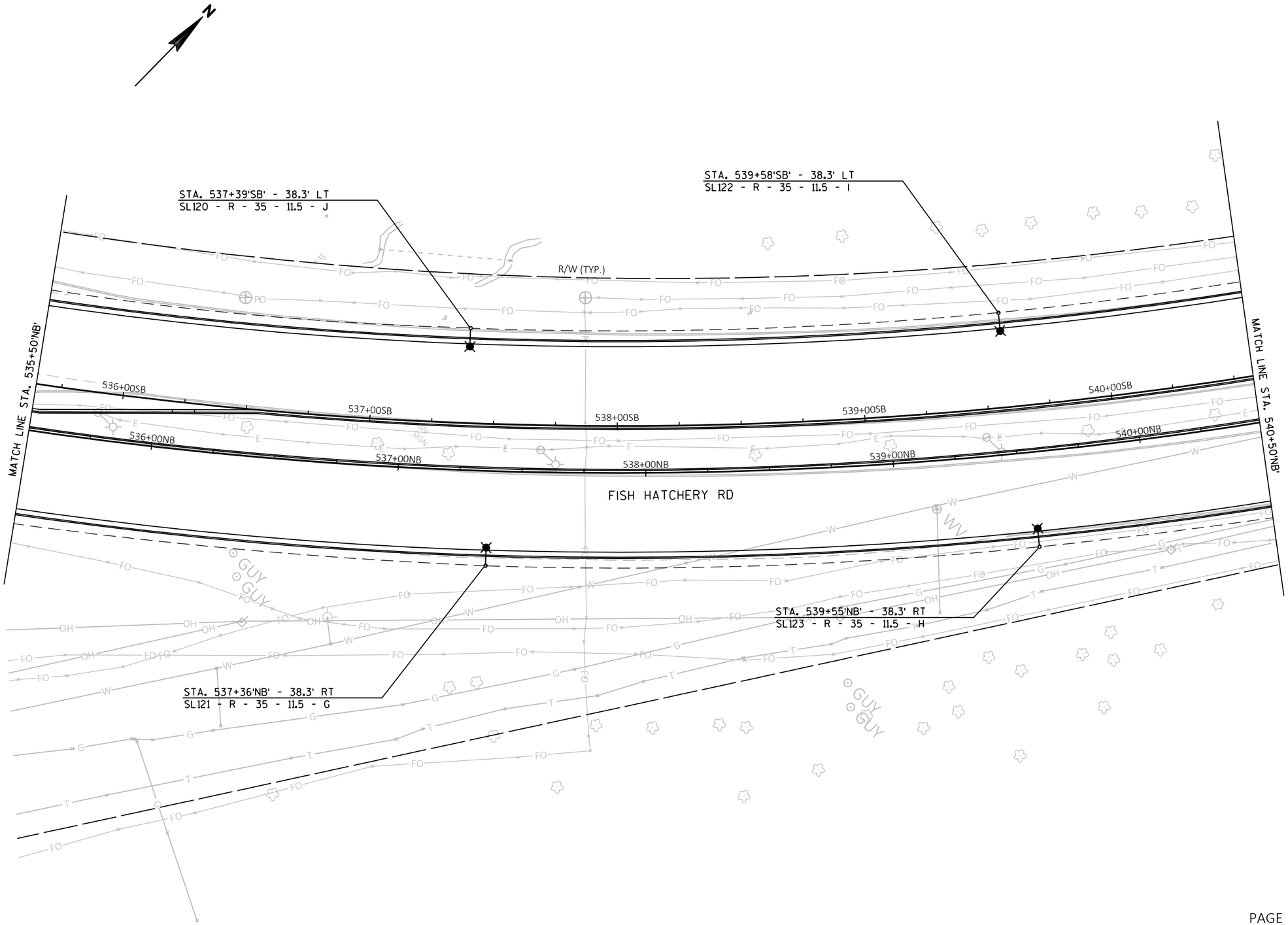

KL Engineering
[A] Better Experience
5400 King James Way
Suite 200
Madison, WI. 53719
Phone: (608) 663-1218
Phone: (800)-810-4012
http://klengineering.com
email@klengineering.com

CITY OF FITCHBURG

LIGHTING PLAN

Project No:	19-3488
Date:	OCT 2019
Designed By:	JAJ
Drafted By:	ACL
Checked By:	MDS

Revisions:

SHEET NO.

X OF X

PLOT DATE : 10/28/2019 3:35 PM

PLOT BY : JACOB JOYAL

FILE NAME : G:\FITCHBRG\18013-000\CIVIL3D\SHEETSPLAN\LIGHTING\KL_FHR_LTG_PROP - A.DWG

G_1 =	CB100	1	2"	
	G	2	#6	1	#6
	H	2	#6	-	-

I_1 =	CB100	1	2"	
	I	2	#6	1	#6
	J	2	#6	-	-

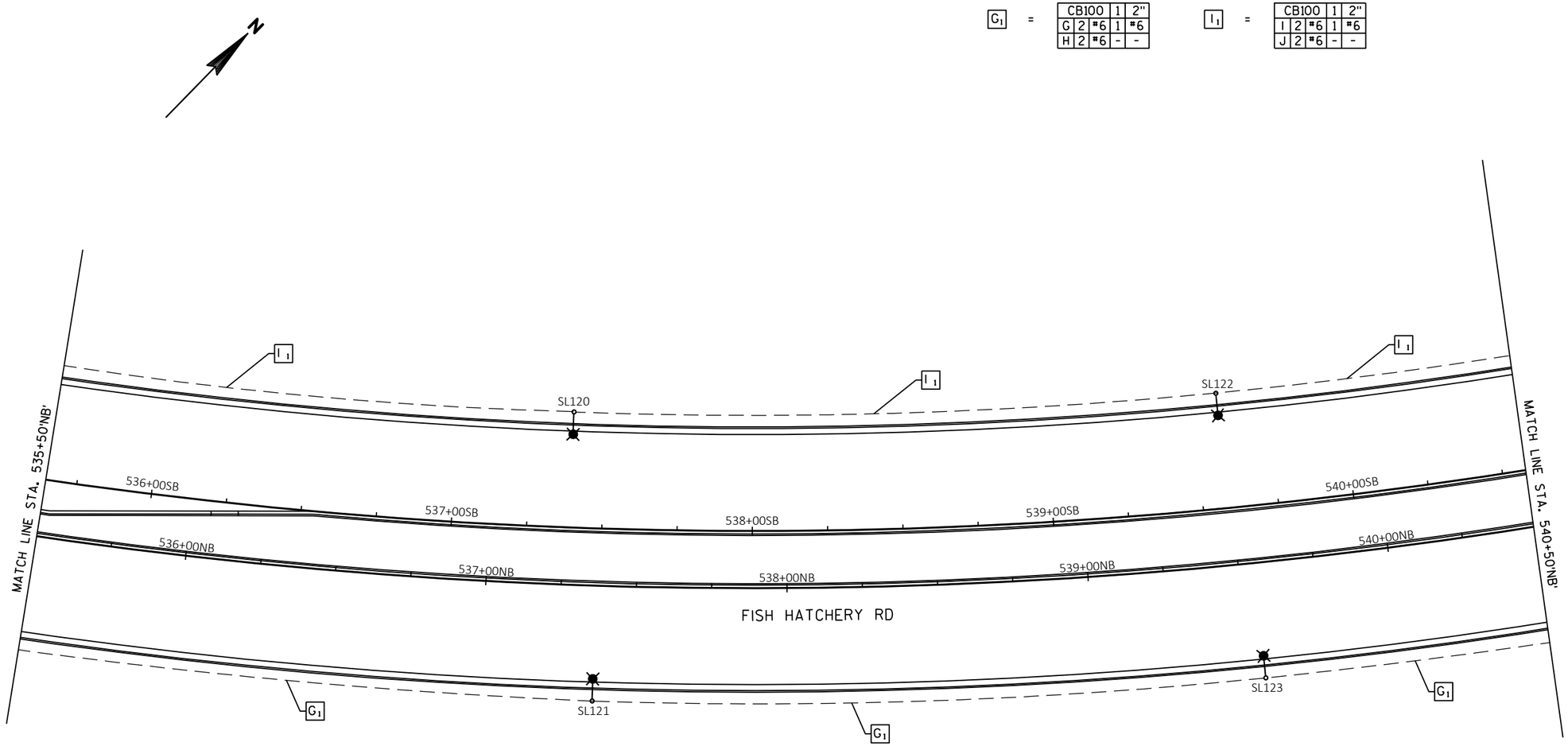

KL Engineering
[A] Better Experience
5400 King James Way
Suite 200
Madison, WI. 53719
Phone: (608) 663-1218
Phone: (800)-810-4012
http://klengineering.com
email@klengineering.com

CITY OF FITCHBURG

LIGHTING PLAN

Project No:	19-3488
Date:	OCT 2019
Designed By:	JAJ
Drafted By:	ACL
Checked By:	MDS

Revisions:

SHEET NO.

X OF X

PLOT DATE : 10/28/2019 3:22 PM

PLOT BY : JACOB JOYAL

FILE NAME : G:\FITCHBRG\18013-000\CIVIL3D\SHEETSPLAN\LIGHTING\KL_FHR_LTG_PROP.DWG

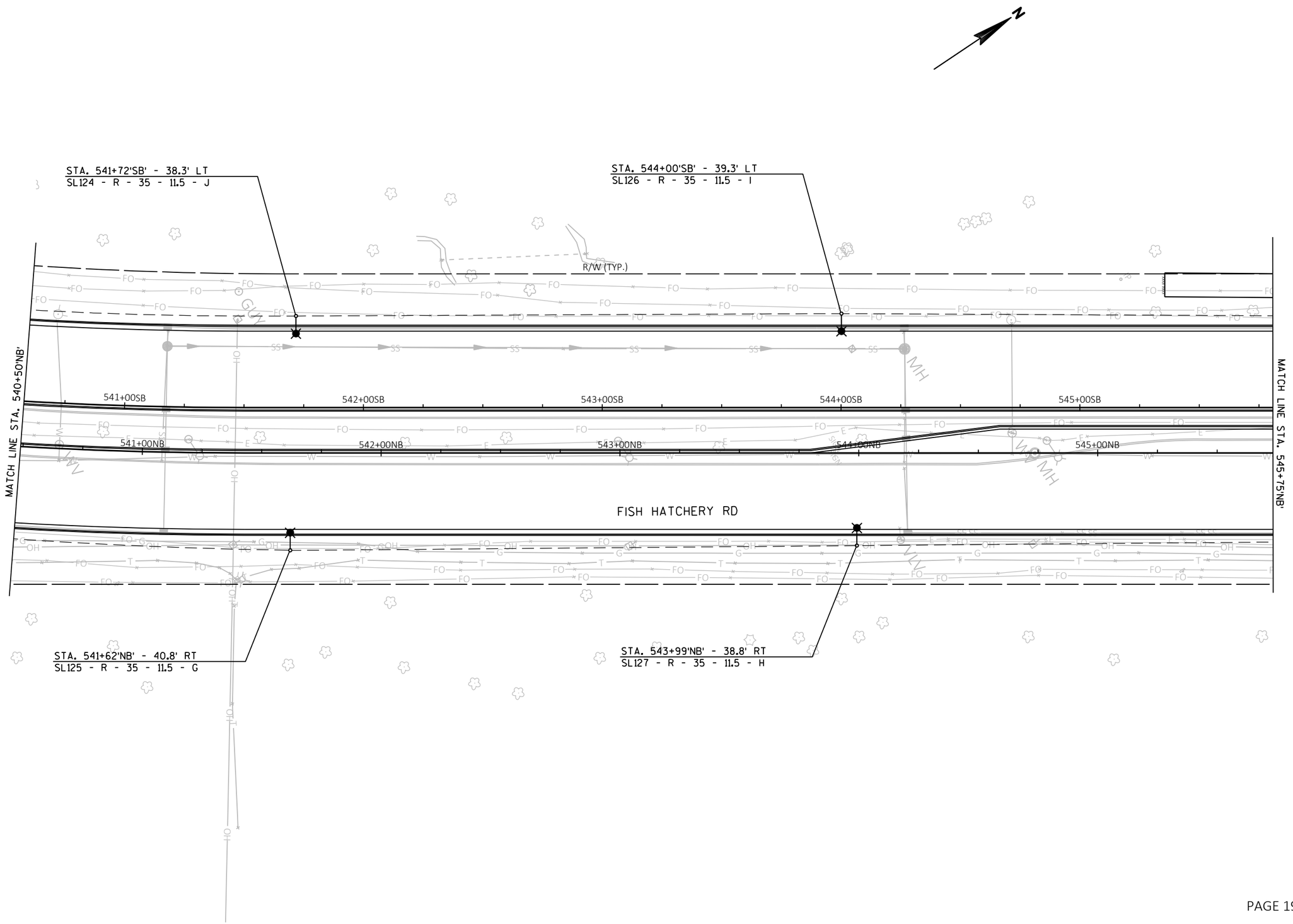

KL Engineering
[A] Better Experience
5400 King James Way
Suite 200
Madison, WI. 53719
Phone: (608) 663-1218
Phone: (800)-810-4012
http://klengineering.com
email@klengineering.com

CITY OF FITCHBURG

LIGHTING PLAN

Project No:	19-3488
Date:	OCT 2019
Designed By:	JAJ
Drafted By:	ACL
Checked By:	MDS

Revisions:

SHEET NO.

X OF X

PLOT DATE : 10/28/2019 3:35 PM

PLOT BY : JACOB JOYAL

FILE NAME : G:\FITCHBRG\180113-000\CIVIL3D\SHEETSPLAN\LIGHTING\KL_FHR_LTG_PROP - A.DWG

G_1 =	CB100	1	2"
	G 2 #6	1	#6
	H 2 #6	-	-

I_1 =	CB100	1	2"
	I 2 #6	1	#6
	J 2 #6	-	-

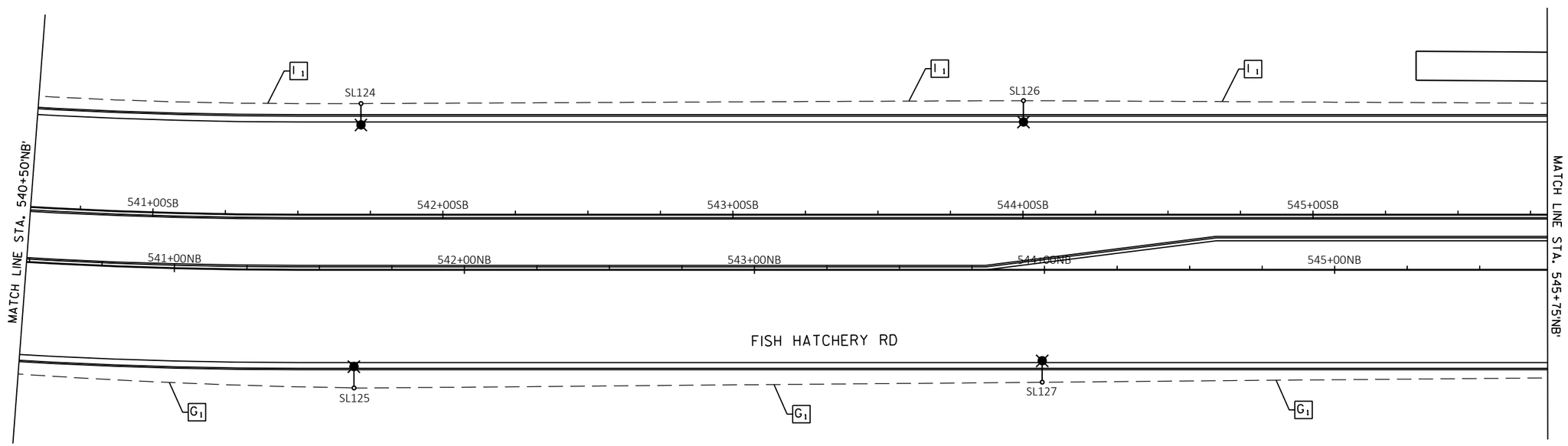

KL Engineering
[A] Better Experience
5400 King James Way
Suite 200
Madison, WI. 53719
Phone: (608) 663-1218
Phone: (800)-810-4012
http://klengineering.com
email@klengineering.com

CITY OF FITCHBURG

LIGHTING PLAN

Project No:	19-3488
Date:	OCT 2019
Designed By:	JAJ
Drafted By:	ACL
Checked By:	MDS

Revisions:

SHEET NO.

X OF X

PLOT DATE : 10/28/2019 3:23 PM

PLOT BY : JACOB JOYAL

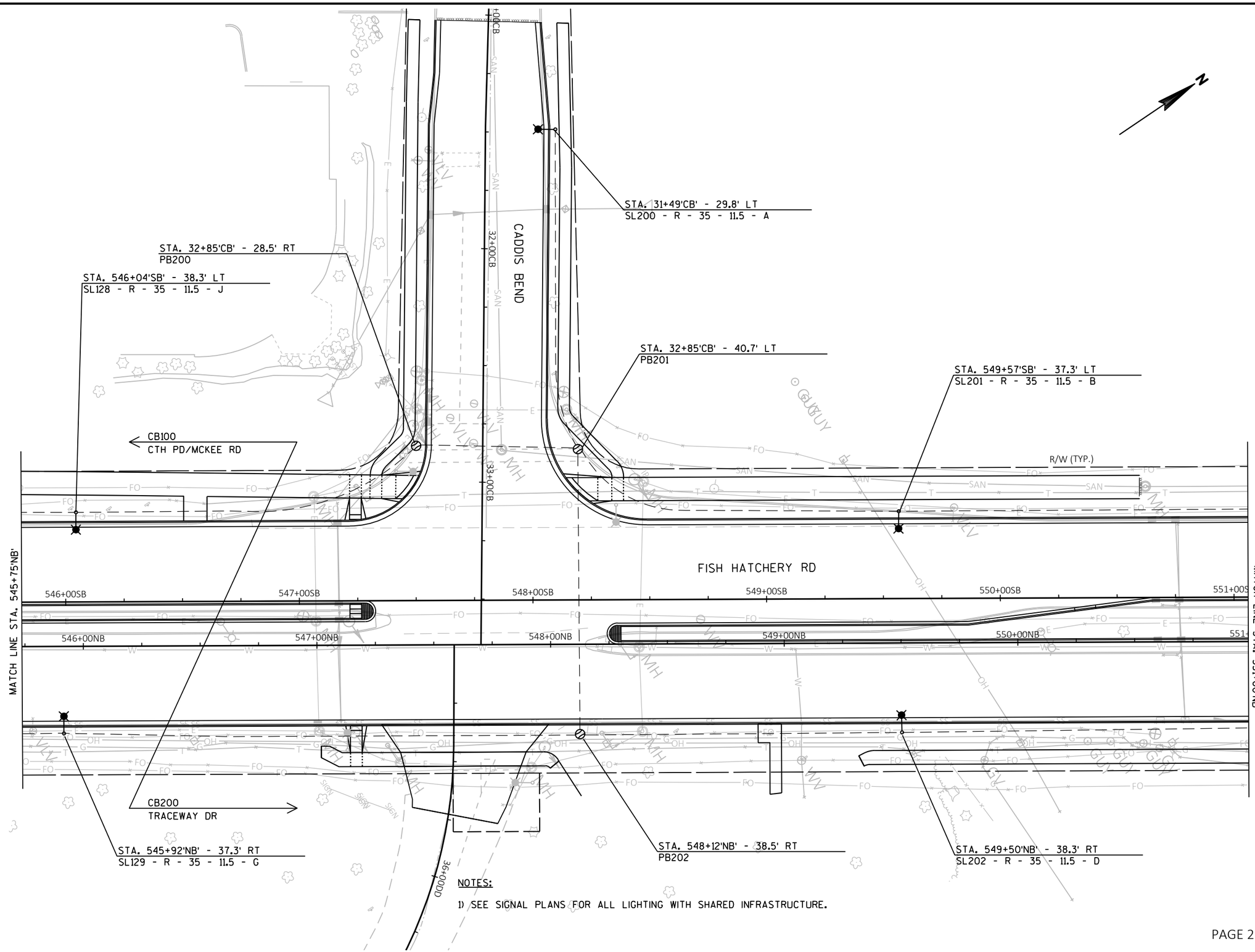

NOTES:

1) SEE SIGNAL PLANS FOR ALL LIGHTING WITH SHARED INFRASTRUCTURE.

KL Engineering
[A] Better Experience
5400 King James Way
Suite 200
Madison, WI. 53719
Phone: (608) 663-1218
Phone: (800)-810-4012
http://klengineering.com
email@klengineering.com

CITY OF FITCHBURG

LIGHTING PLAN

Project No:	19-3488
Date:	OCT 2019
Designed By:	JAJ
Drafted By:	ACL
Checked By:	MDS

Revisions:

SHEET NO.

X OF X

FILE NAME : G:\FITCHBRG\18013-000\CIVIL3D\SHEETSPLAN\LIGHTING\KL_FHR_LTG_PROP.DWG

PLOT DATE : 10/28/2019 3:35 PM

PLOT BY : JACOB JOYAL

FILE NAME : G:\FITCHBRG\18013-000\CIVIL3D\SHEETSPLAN\LIGHTING\KL_FHR_LTG_PROP - A.DWG

G_1 =

CB100		1	2"
G	2	#6	1	#6
H	2	#6	-	-

I_1 =

CB100		1	2"
I	2	#6	1	#6
J	2	#6	-	-

A_2 =

CB200		1	2"
A	2	#6	1	#6
B	2	#6	-	-

C_2 =

CB200		1	2"
C	2	#6	1	#6
D	2	#6	-	-

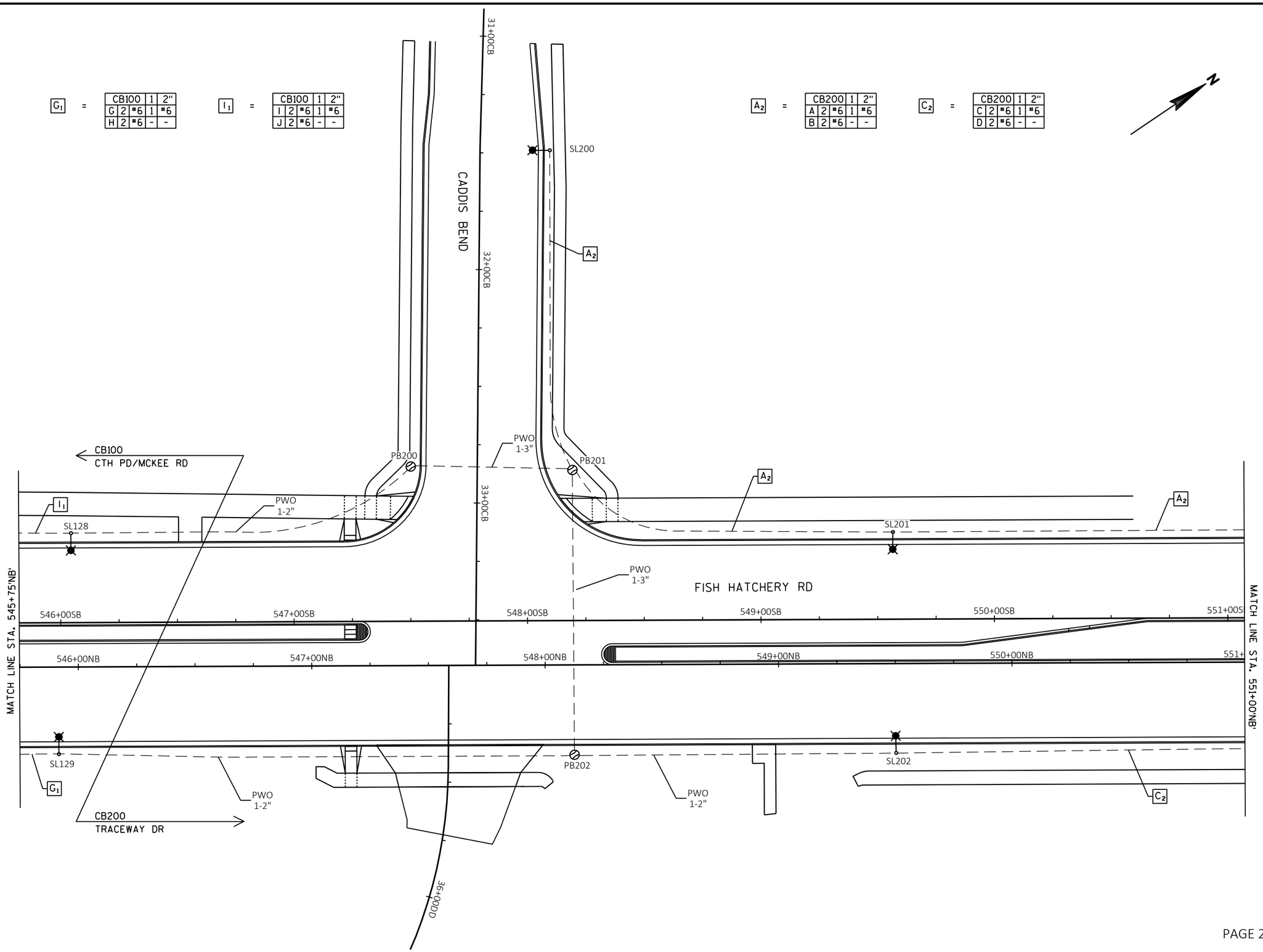

KL Engineering
[A] Better Experience
5400 King James Way
Suite 200
Madison, WI. 53719
Phone: (608) 663-1218
Phone: (800)-810-4012
http://klengineering.com
email@klengineering.com

CITY OF FITCHBURG

LIGHTING PLAN

Project No:	19-3488
Date:	OCT 2019
Designed By:	JAJ
Drafted By:	ACL
Checked By:	MDS

Revisions:

SHEET NO.

X OF X

PLOT DATE : 10/28/2019 3:23 PM

PLOT BY : JACOB JOYAL

FILE NAME : G:\FITCHBRG\180113-000\CIVIL3D\SHEETSPLAN\LIGHTING\KL_FHR_LTG_PROP.DWG

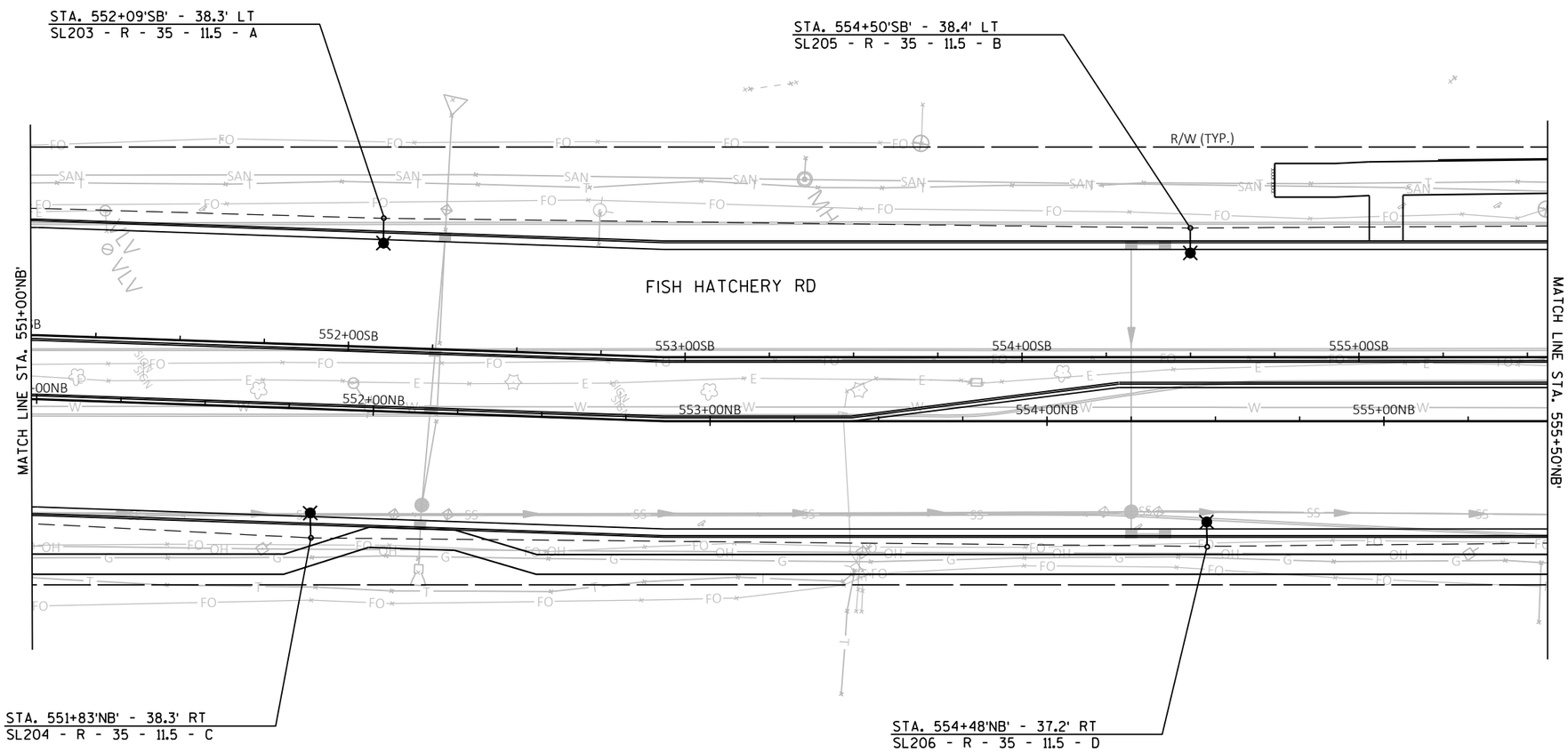

KL Engineering
[A] Better Experience
5400 King James Way
Suite 200
Madison, WI. 53719
Phone: (608) 663-1218
Phone: (800)-810-4012
http://klengineering.com
email@klengineering.com

CITY OF FITCHBURG

LIGHTING PLAN

Project No:	19-3488
Date:	OCT 2019
Designed By:	JAJ
Drafted By:	ACL
Checked By:	MDS

Revisions:

SHEET NO.

X OF X

PLOT DATE : 10/28/2019 3:35 PM

PLOT BY : JACOB JOYAL

A_2 =

CB200		1	2"
A	2 #6	1	#6
B	2 #6	-	-

C_2 =

CB200		1	2"
C	2 #6	1	#6
D	2 #6	-	-

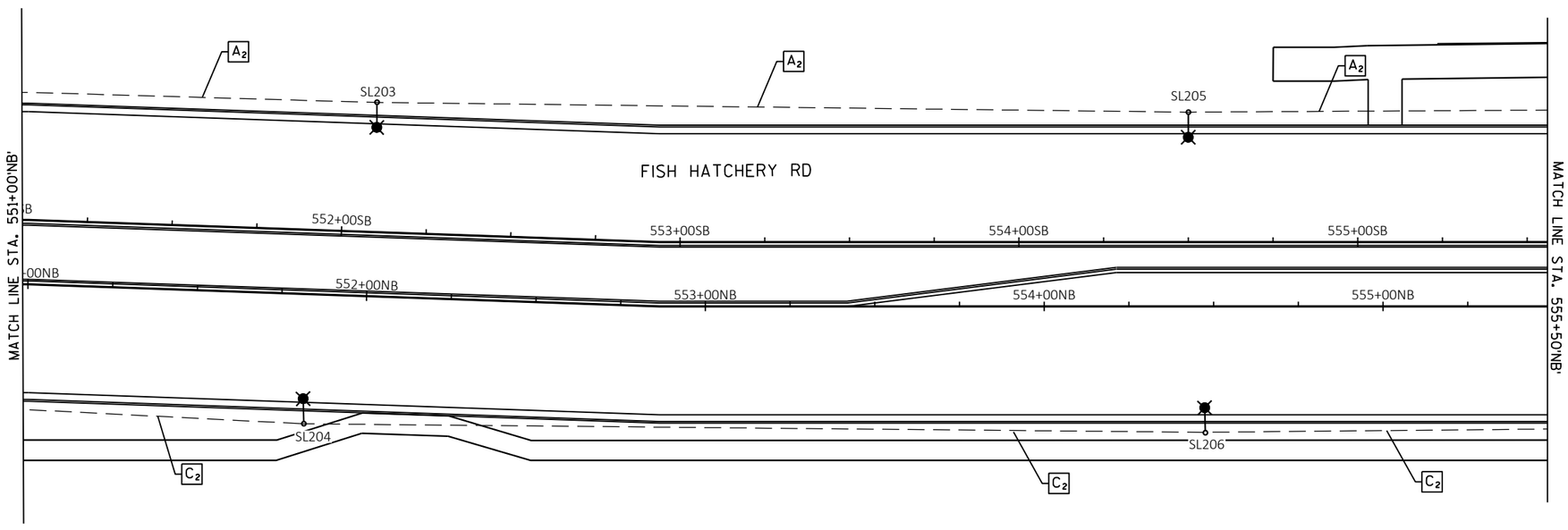

KL Engineering
[A] Better Experience
5400 King James Way
Suite 200
Madison, WI. 53719
Phone: (608) 663-1218
Phone: (800)-810-4012
http://klengineering.com
email@klengineering.com

CITY OF FITCHBURG

LIGHTING PLAN

Project No:	19-3488
Date:	OCT 2019
Designed By:	JAJ
Drafted By:	ACL
Checked By:	MDS

Revisions:

SHEET NO.

X OF X

FILE NAME : G:\FITCHBRG\18013-000\CIVIL3D\SHEETSPLAN\LIGHTING\KL_FHR_LTG_PROP - A.DWG

PLOT DATE : 10/28/2019 3:23 PM

PLOT BY : JACOB JOYAL

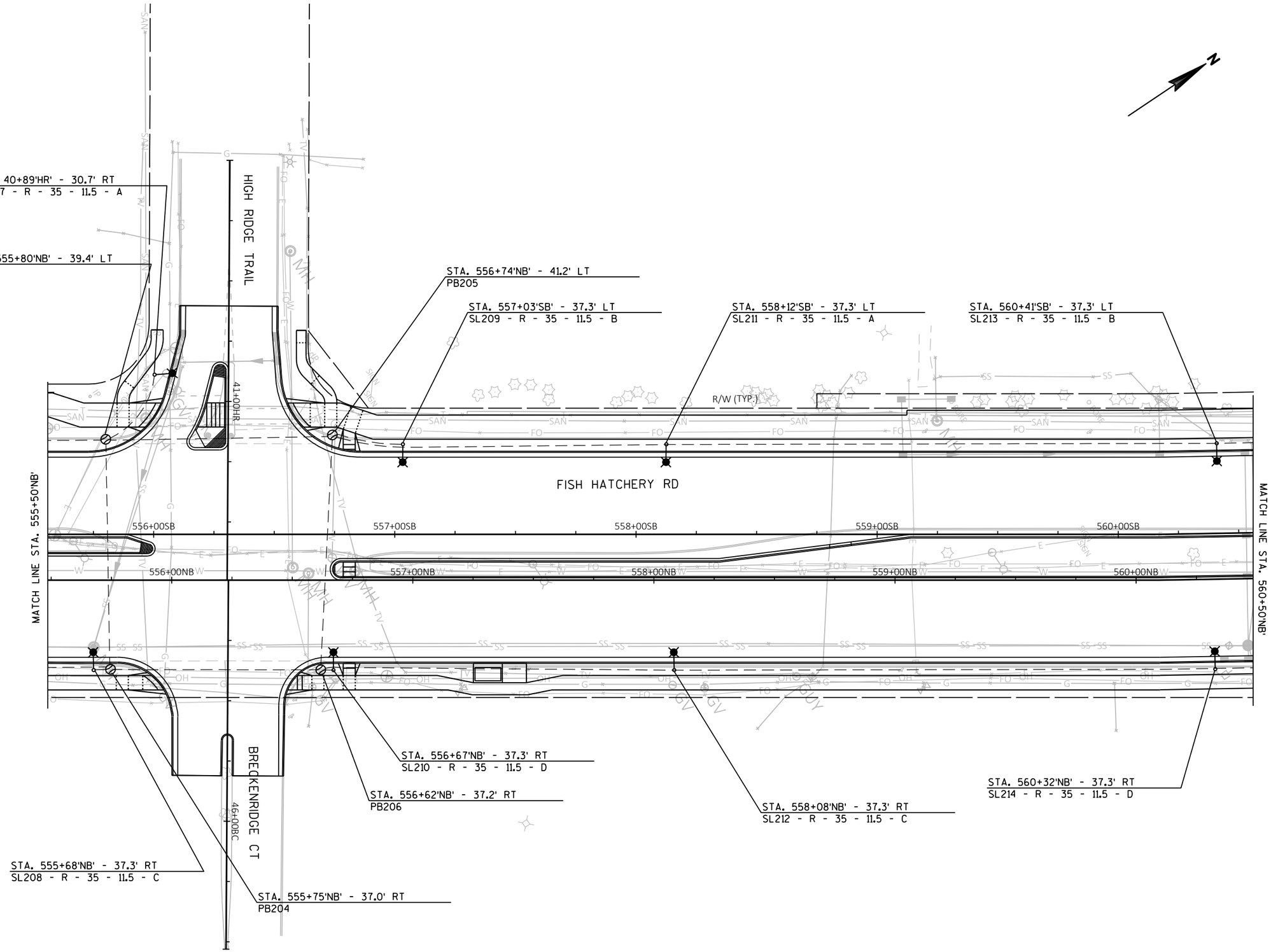

KL Engineering
[A] Better Experience
5400 King James Way
Suite 200
Madison, WI. 53719
Phone: (608) 663-1218
Phone: (800)-810-4012
http://klengineering.com
email@klengineering.com

CITY OF FITCHBURG

LIGHTING PLAN

Project No:	19-3488
Date:	OCT 2019
Designed By:	JAJ
Drafted By:	ACL
Checked By:	MDS

Revisions:

SHEET NO.

X OF X

FILE NAME : G:\FITCHBRG\18013-000\CIVIL3D\SHEETSPLAN\LIGHTING\KL_FHR_LTG_PROP.DWG

PLOT DATE : 10/28/2019 3:35 PM

PLOT BY : JACOB JOYAL

FILE NAME : G:\FITCHBRG\18013-000\CIVIL3D\SHEETSPLAN\LIGHTING\KL_FHR_LTG_PROP - A.DWG

A_2 =	CB200	1	2"
	A	2 #6	1 #6
	B	2 #6	- -

B_2 =	CB200	1	3"
	A	2 #6	1 #6
	B	2 #6	- -

C_2 =	CB200	1	2"
	C	2 #6	1 #6
	D	2 #6	- -

D_2 =	CB200	1	3"
	C	2 #6	1 #6
	D	2 #6	- -

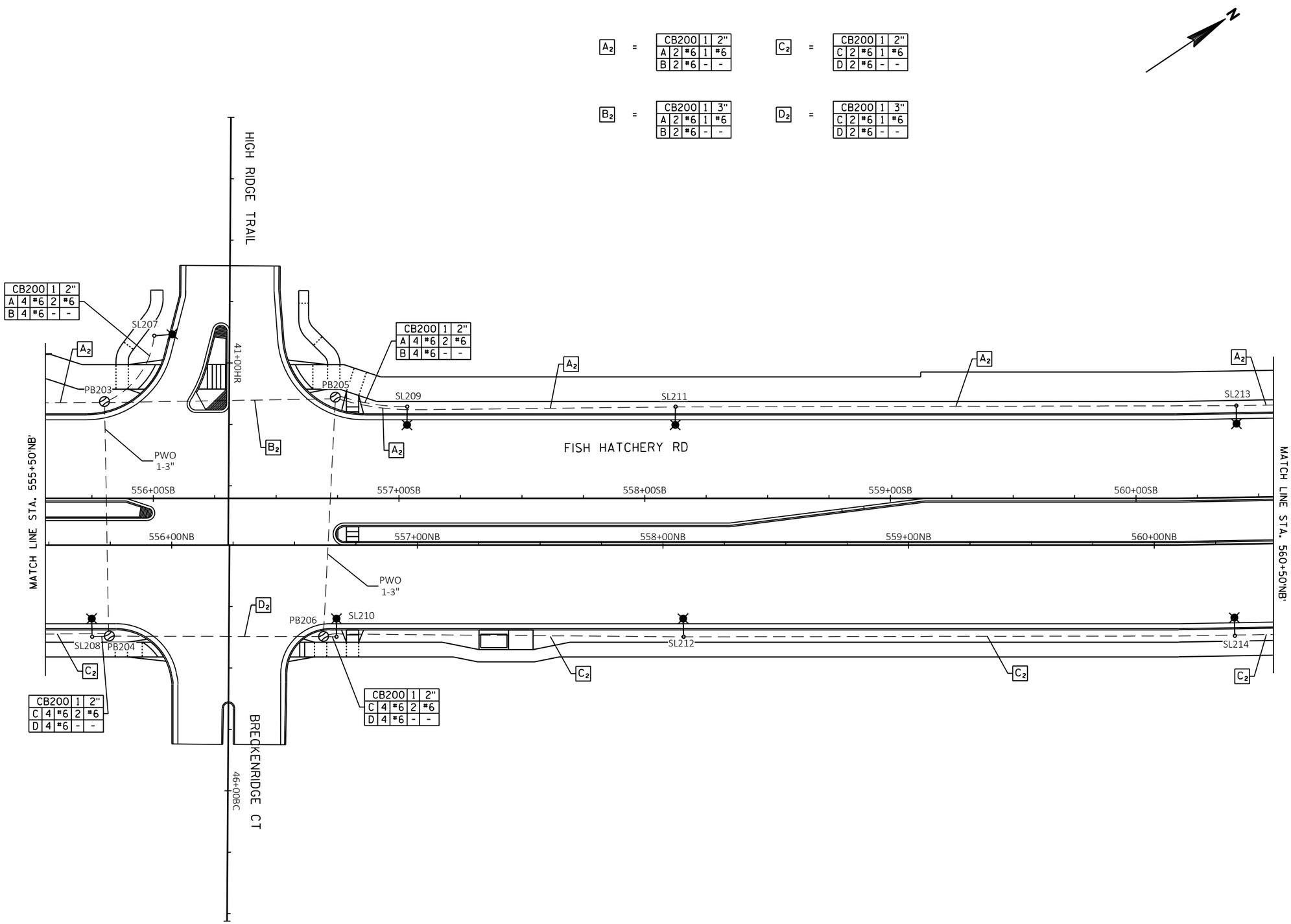

KL Engineering
[A] Better Experience
5400 King James Way
Suite 200
Madison, WI. 53719
Phone: (608) 663-1218
Phone: (800)-810-4012
http://klengineering.com
email@klengineering.com

CITY OF FITCHBURG

LIGHTING PLAN

Project No:	19-3488
Date:	OCT 2019
Designed By:	JAJ
Drafted By:	ACL
Checked By:	MDS

Revisions:

SHEET NO.

X OF X

PLOT DATE : 10/28/2019 3:24 PM

PLOT BY : JACOB JOYAL

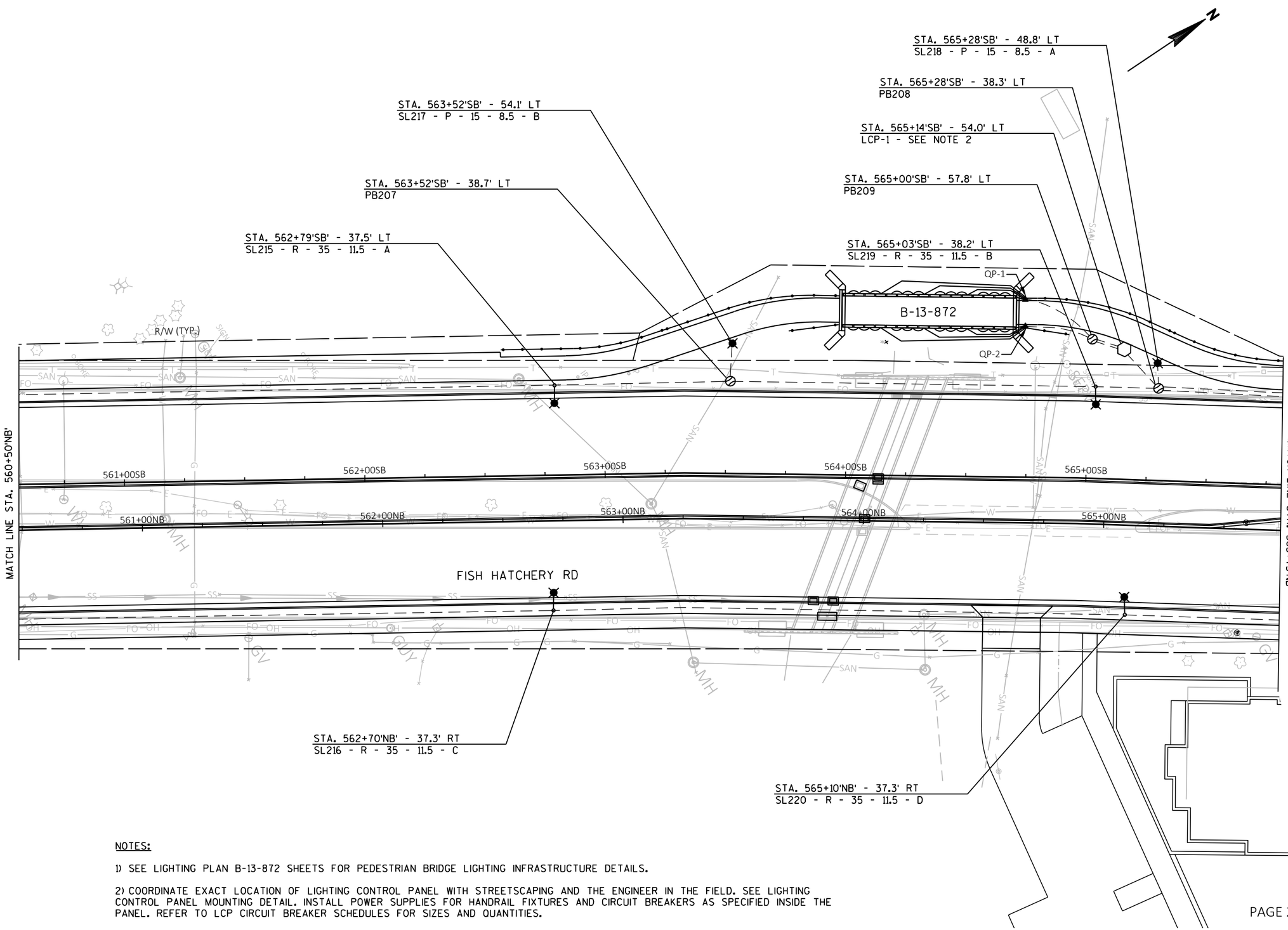

NOTES:

1) SEE LIGHTING PLAN B-13-872 SHEETS FOR PEDESTRIAN BRIDGE LIGHTING INFRASTRUCTURE DETAILS.

2) COORDINATE EXACT LOCATION OF LIGHTING CONTROL PANEL WITH STREETSCAPING AND THE ENGINEER IN THE FIELD. SEE LIGHTING CONTROL PANEL MOUNTING DETAIL. INSTALL POWER SUPPLIES FOR HANDRAIL FIXTURES AND CIRCUIT BREAKERS AS SPECIFIED INSIDE THE PANEL. REFER TO LCP CIRCUIT BREAKER SCHEDULES FOR SIZES AND QUANTITIES.

KL Engineering
[A] Better Experience
5400 King James Way
Suite 200
Madison, WI. 53719
Phone: (608) 663-1218
Phone: (800)-810-4012
http://klengineering.com
email@klengineering.com

CITY OF FITCHBURG

LIGHTING PLAN

Project No:	19-3488
Date:	OCT 2019
Designed By:	JAJ
Drafted By:	ACL
Checked By:	MDS

Revisions:

SHEET NO.

X OF X

FILE NAME : G:\FITCHBRG\18013-000\CIVIL3D\SHEETSPLAN\LIGHTING\KL_FHR_LTG_PROP.DWG

PLOT DATE : 10/28/2019 3:35 PM

PLOT BY : JACOB JOYAL

FILE NAME : G:\FITCHBRG\18013-000\CIVIL3D\SHEETSPLAN\LIGHTING\KL_FHR_LTG_PROP - A.DWG

A_2 =

CB200	1	2"	
A	2	#6	1	#6
B	2	#6	-	-

C_2 =

CB200	1	2"	
C	2	#6	1	#6
D	2	#6	-	-

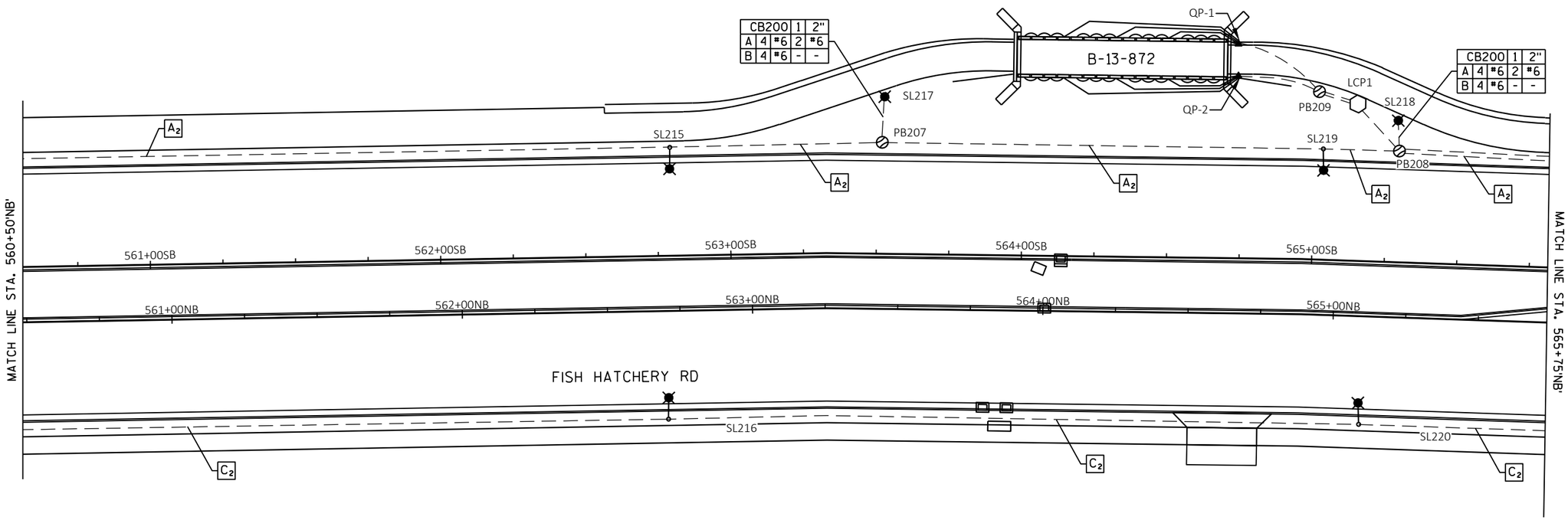

NOTES:

1) SEE LIGHTING PLAN - B-13-872 FOR PEDESTRIAN BRIDGE LIGHTING INFRASTRUCTURE DETAILS.

KL Engineering
[A] Better Experience
5400 King James Way
Suite 200
Madison, WI. 53719
Phone: (608) 663-1218
Phone: (800)-810-4012
http://klengineering.com
email@klengineering.com

CITY OF FITCHBURG

LIGHTING PLAN

Project No:	19-3488
Date:	OCT 2019
Designed By:	JAJ
Drafted By:	ACL
Checked By:	MDS

Revisions:

SHEET NO.

X OF X

PLOT DATE : 10/28/2019 3:24 PM

PLOT BY : JACOB JOYAL

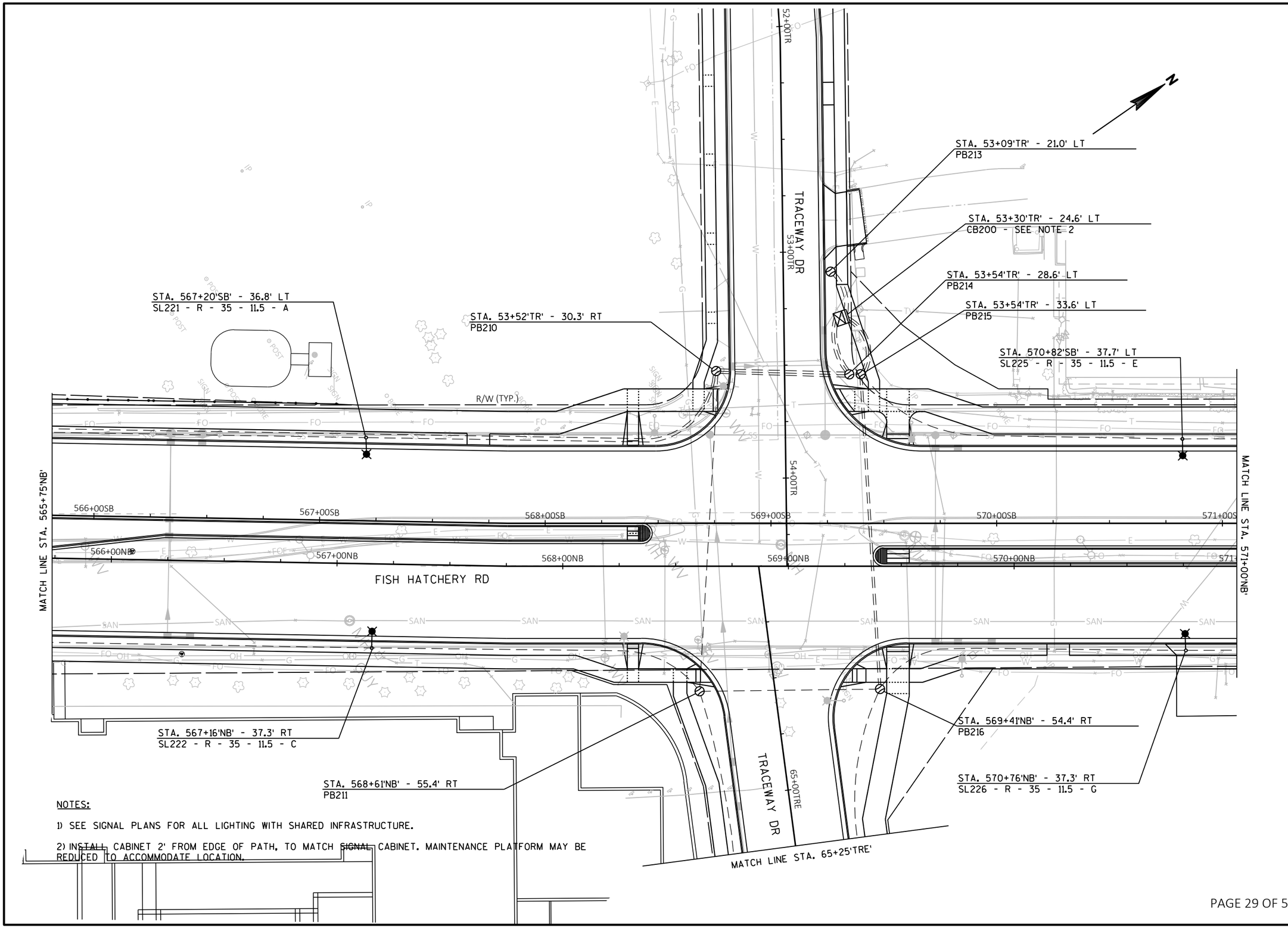

NOTES:

1) SEE SIGNAL PLANS FOR ALL LIGHTING WITH SHARED INFRASTRUCTURE.

2) INSTALL CABINET 2' FROM EDGE OF PATH, TO MATCH ~~SIGNAL~~ CABINET. MAINTENANCE PLATFORM MAY BE REDUCED TO ACCOMMODATE LOCATION.

KL Engineering
[A] Better Experience
5400 King James Way
Suite 200
Madison, WI. 53719
Phone: (608) 663-1218
Phone: (800)-810-4012
http://klengineering.com
email@klengineering.com

CITY OF FITCHBURG

LIGHTING PLAN

Project No:	19-3488
Date:	OCT 2019
Designed By:	JAJ
Drafted By:	ACL
Checked By:	MDS

Revisions:

SHEET NO.

X OF X

FILE NAME : G:\FITCHBRG\18013-000\CIVIL3D\SHEETSPLAN\LIGHTING\KL_FHR_LTG_PROP.DWG

PLOT DATE : 10/28/2019 3:35 PM
PLOT BY : JACOB JOYAL
FILE NAME : G:\FITCHBRG\18013-000\CIVIL3D\SHEETSPLAN\LIGHTING\KL_FHR_LTG_PROP - A.DWG

A_2 =

CB200	1	2"
A	2 #6	1 #6
B	2 #6	- -

B_2 =

CB200	1	3"
A	2 #6	1 #6
B	2 #6	- -

C_2 =

CB200	1	2"
C	2 #6	1 #6
D	2 #6	- -

D_2 =

CB200	1	3"
C	2 #6	1 #6
D	2 #6	- -

E_2 =

CB200	1	2"
E	2 #6	1 #6
F	2 #6	- -

F_2 =

CB200	1	3"
E	2 #6	1 #6
F	2 #6	- -

G_2 =

CB200	1	2"
G	2 #6	1 #6
H	2 #6	- -

H_2 =

CB200	1	3"
G	2 #6	1 #6
H	2 #6	- -

I_2 =

CB200	1	2"
I	2 #6	1 #6
J	2 #6	- -

J_2 =

CB200	1	3"
I	2 #6	1 #6
J	2 #6	- -

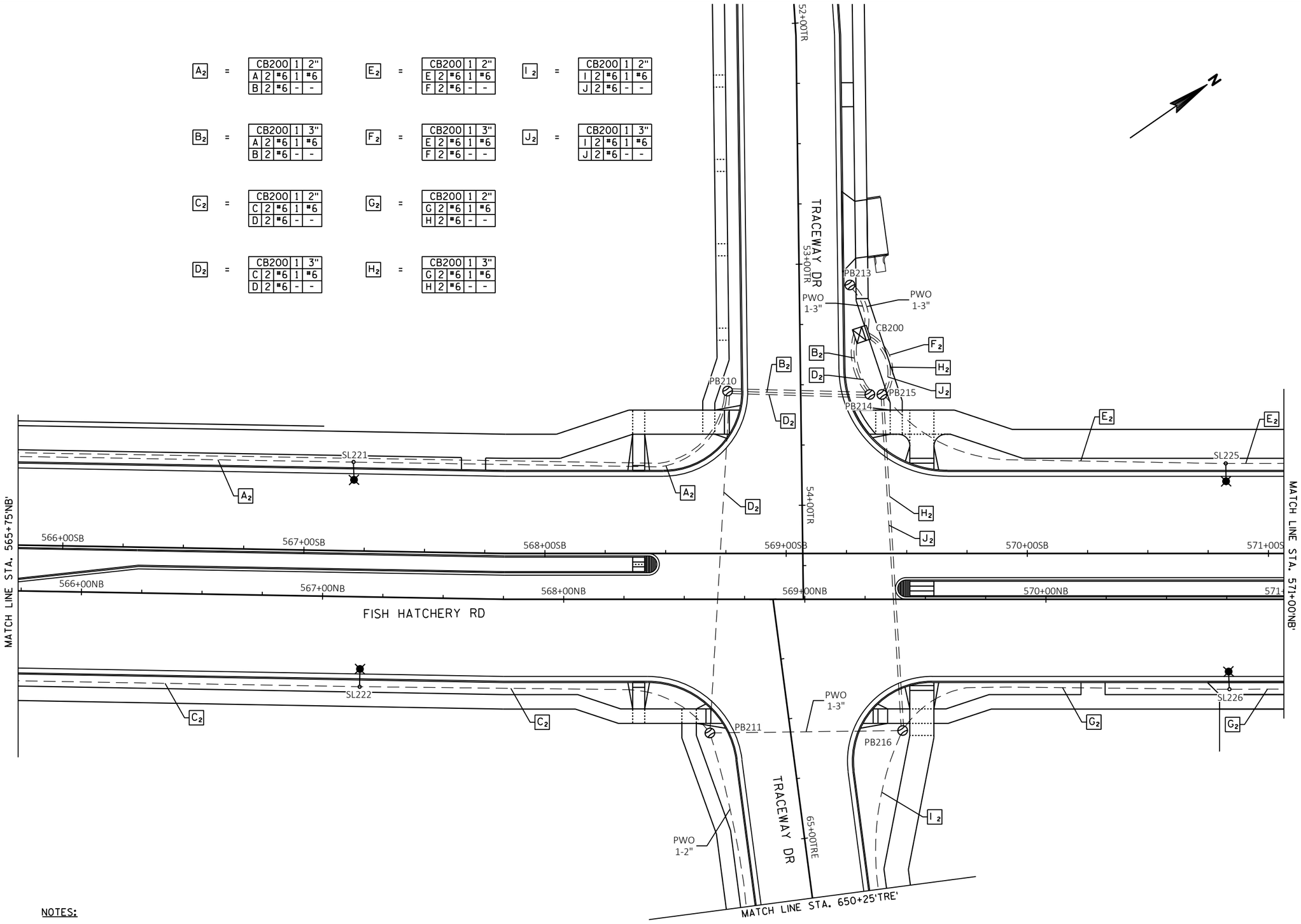

NOTES:

1) SEE LIGHTING PLAN - B-13-872 FOR PEDESTRIAN BRIDGE CIRCUITING AND CONDUIT INFORMATION.

KL Engineering
[A] Better Experience
5400 King James Way
Suite 200
Madison, WI. 53719
Phone: (608) 663-1218
Phone: (800)-810-4012
http://klengineering.com
email@klengineering.com

CITY OF FITCHBURG

LIGHTING PLAN

Project No:	19-3488
Date:	OCT 2019
Designed By:	JAJ
Drafted By:	ACL
Checked By:	MDS

Revisions:

SHEET NO.

X OF X

PLOT DATE : 10/28/2019 3:25 PM

PLOT BY : JACOB JOYAL

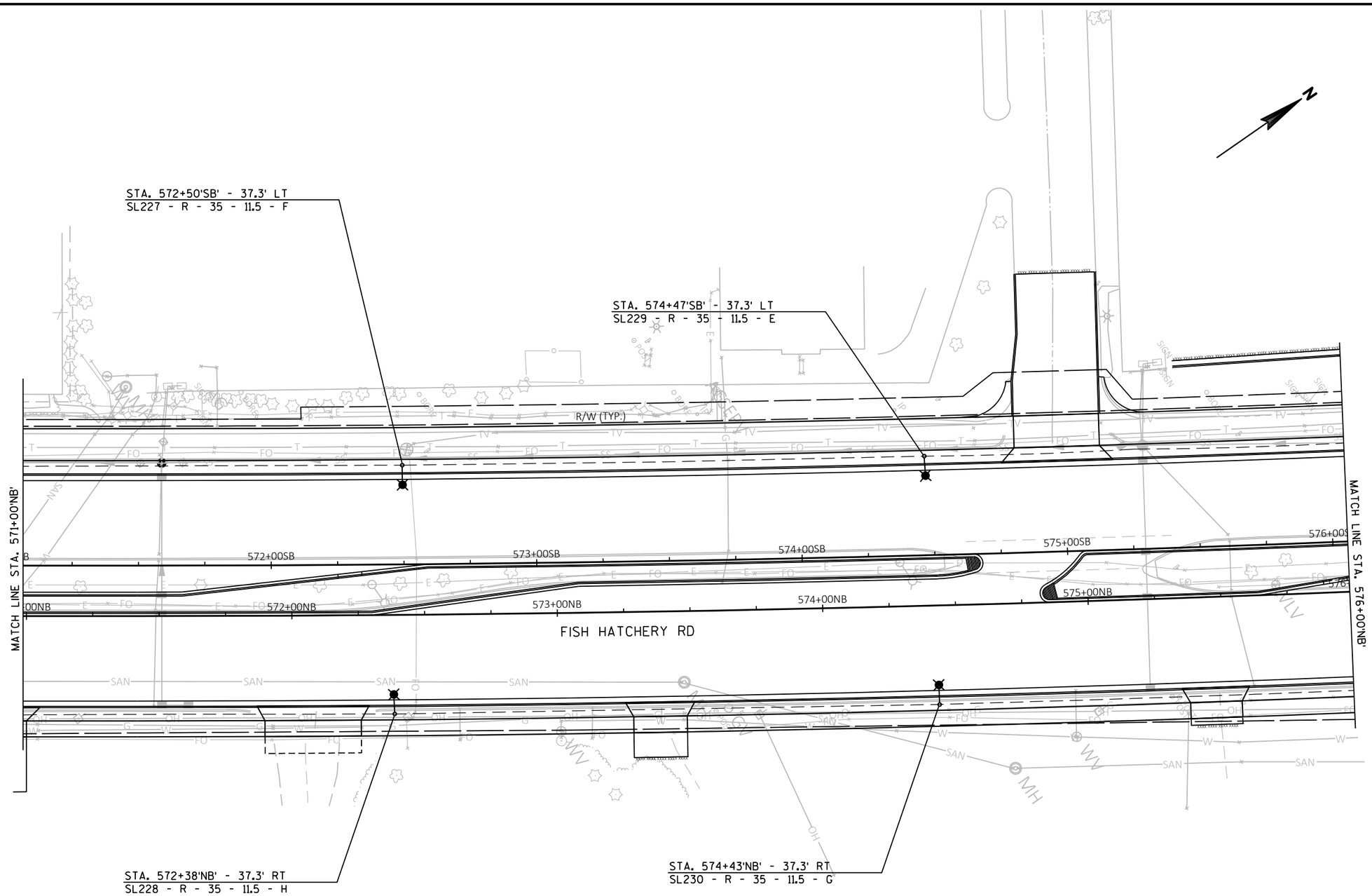

KL Engineering
[A] Better Experience
5400 King James Way
Suite 200
Madison, WI. 53719
Phone: (608) 663-1218
Phone: (800)-810-4012
http://klengineering.com
email@klengineering.com

CITY OF FITCHBURG

LIGHTING PLAN

Project No:	19-3488
Date:	OCT 2019
Designed By:	JAJ
Drafted By:	ACL
Checked By:	MDS

Revisions:

SHEET NO.

X OF X

FILE NAME : G:\FITCHBRG\18013-000\CIVIL3D\SHEETSPLAN\LIGHTING\KL_FHR_LTG_PROP.DWG

PLOT DATE : 10/28/2019 3:35 PM

PLOT BY : JACOB JOYAL

FILE NAME : G:\FITCHBRG\18013-000\CIVIL3D\SHEETSPLAN\LIGHTING\KL_FHR_LTG_PROP - A.DWG

E_2 =

CB200		1	2"
E	2	#6	1	#6
F	2	#6	-	-

G_2 =

CB200		1	2"
G	2	#6	1	#6
H	2	#6	-	-

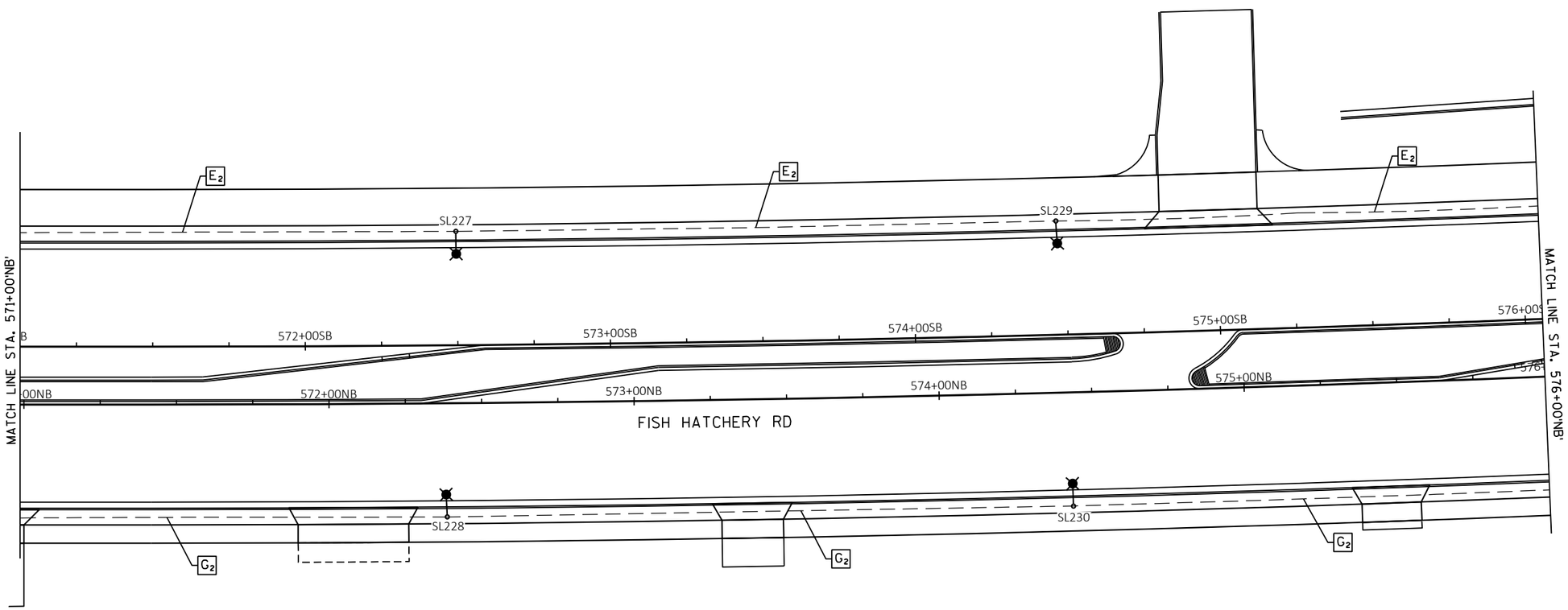

KL Engineering
[A] Better Experience
5400 King James Way
Suite 200
Madison, WI. 53719
Phone: (608) 663-1218
Phone: (800)-810-4012
http://klengineering.com
email@klengineering.com

CITY OF FITCHBURG

LIGHTING PLAN

Project No:	19-3488
Date:	OCT 2019
Designed By:	JAJ
Drafted By:	ACL
Checked By:	MDS

Revisions:

SHEET NO.

X OF X

PLOT DATE : 10/28/2019 3:25 PM

PLOT BY : JACOB JOYAL

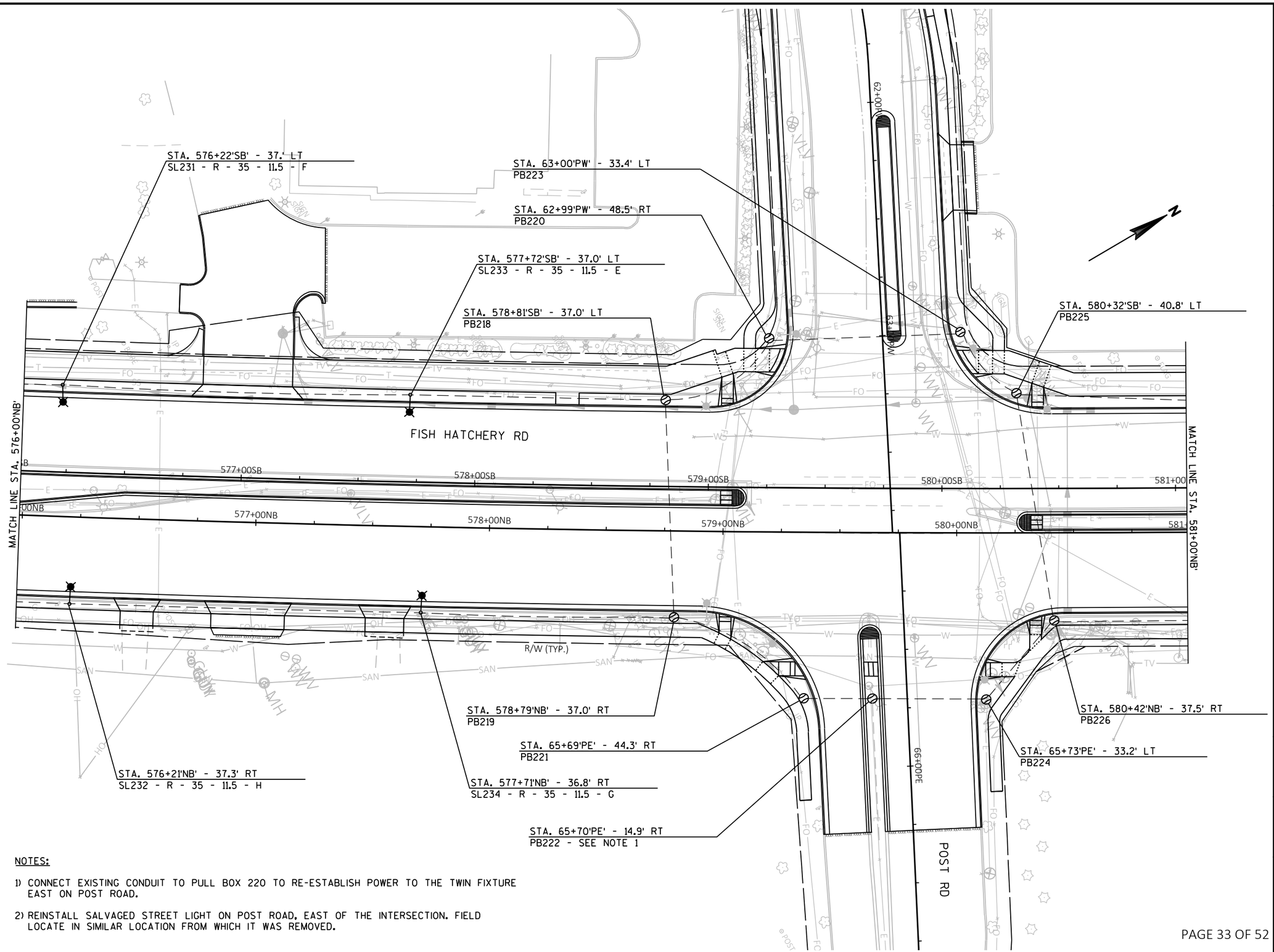

NOTES:

1) CONNECT EXISTING CONDUIT TO PULL BOX 220 TO RE-ESTABLISH POWER TO THE TWIN FIXTURE EAST ON POST ROAD.

2) REINSTALL SALVAGED STREET LIGHT ON POST ROAD, EAST OF THE INTERSECTION. FIELD LOCATE IN SIMILAR LOCATION FROM WHICH IT WAS REMOVED.

KL Engineering
[A] Better Experience
5400 King James Way
Suite 200
Madison, WI. 53719
Phone: (608) 663-1218
Phone: (800)-810-4012
http://klengineering.com
email@klengineering.com

CITY OF FITCHBURG

LIGHTING PLAN

Project No:	19-3488
Date:	OCT 2019
Designed By:	JAJ
Drafted By:	ACL
Checked By:	MDS

Revisions:

SHEET NO.

X OF X

FILE NAME : G:\FITCHBRG\180113-000\CIVIL3D\SHEETSPLAN\LIGHTING\KL_FHR_LTG_PROP.DWG

PLOT DATE : 10/28/2019 3:35 PM

PLOT BY : JACOB JOYAL

FILE NAME : G:\FITCHBRG\18013-000\CIVIL3D\SHEETSPLAN\LIGHTING\KL_FHR_LTG_PROP - A.DWG

E_2 =

CB200	1	2"
E 2 #6	1	#6
F 2 #6	-	-

G_2 =

CB200	1	2"
G 2 #6	1	#6
H 2 #6	-	-

F_2 =

CB200	1	3"
E 2 #6	1	#6
F 2 #6	-	-

H_2 =

CB200	1	3"
G 2 #6	1	#6
H 2 #6	-	-

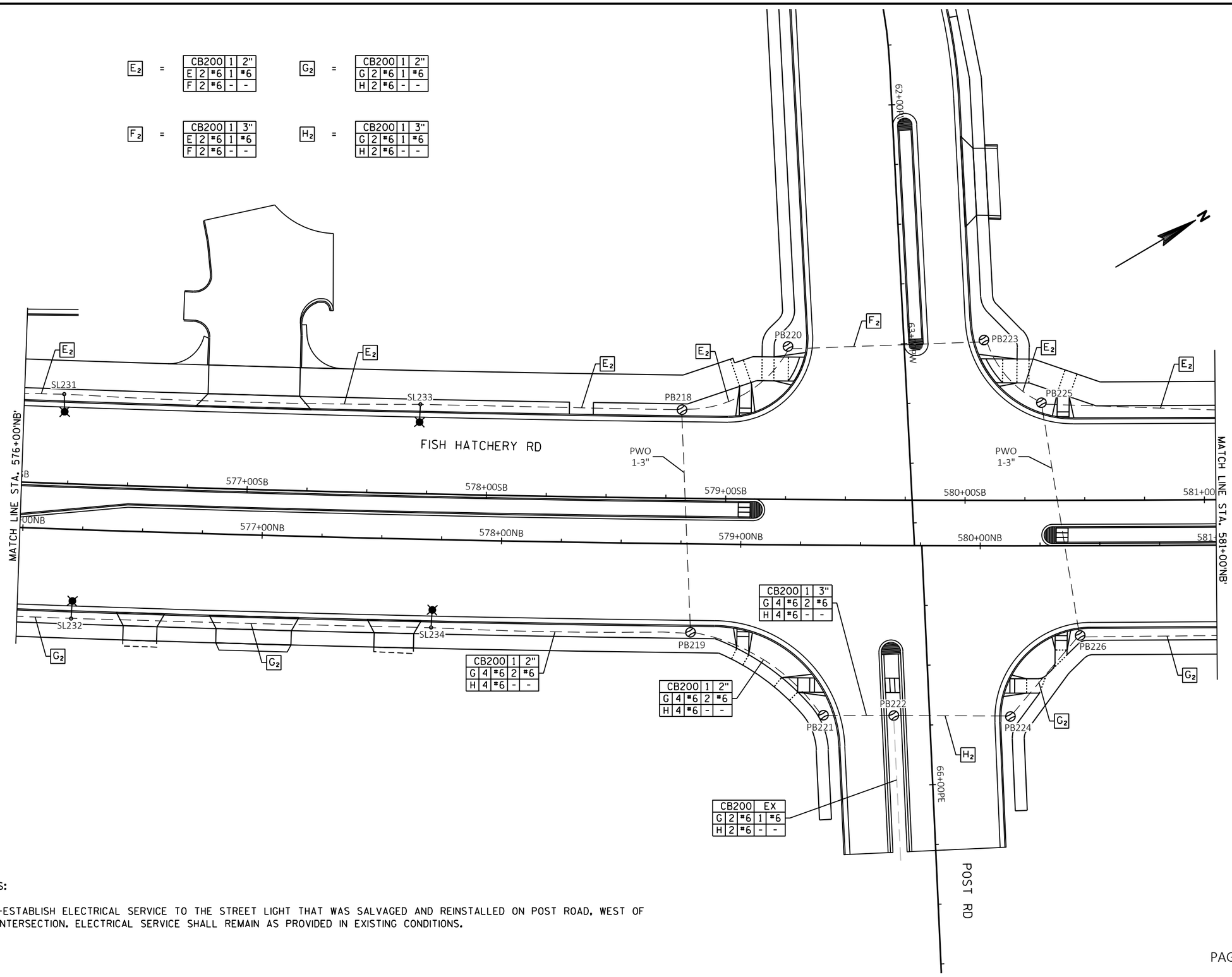

NOTES:

1) RE-ESTABLISH ELECTRICAL SERVICE TO THE STREET LIGHT THAT WAS SALVAGED AND REINSTALLED ON POST ROAD, WEST OF THE INTERSECTION. ELECTRICAL SERVICE SHALL REMAIN AS PROVIDED IN EXISTING CONDITIONS.

KL Engineering
[A] Better Experience
5400 King James Way
Suite 200
Madison, WI. 53719
Phone: (608) 663-1218
Phone: (800)-810-4012
http://klengineering.com
email@klengineering.com

CITY OF FITCHBURG

LIGHTING PLAN

Project No:	19-3488
Date:	OCT 2019
Designed By:	JAJ
Drafted By:	ACL
Checked By:	MDS

Revisions:

SHEET NO.

X OF X

PLOT DATE : 10/28/2019 3:25 PM

PLOT BY : JACOB JOYAL

FILE NAME : G:\FITCHBRG\180113-000\CIVIL3D\SHEETSPLAN\LIGHTING\KL_FHR_LTG_PROP.DWG

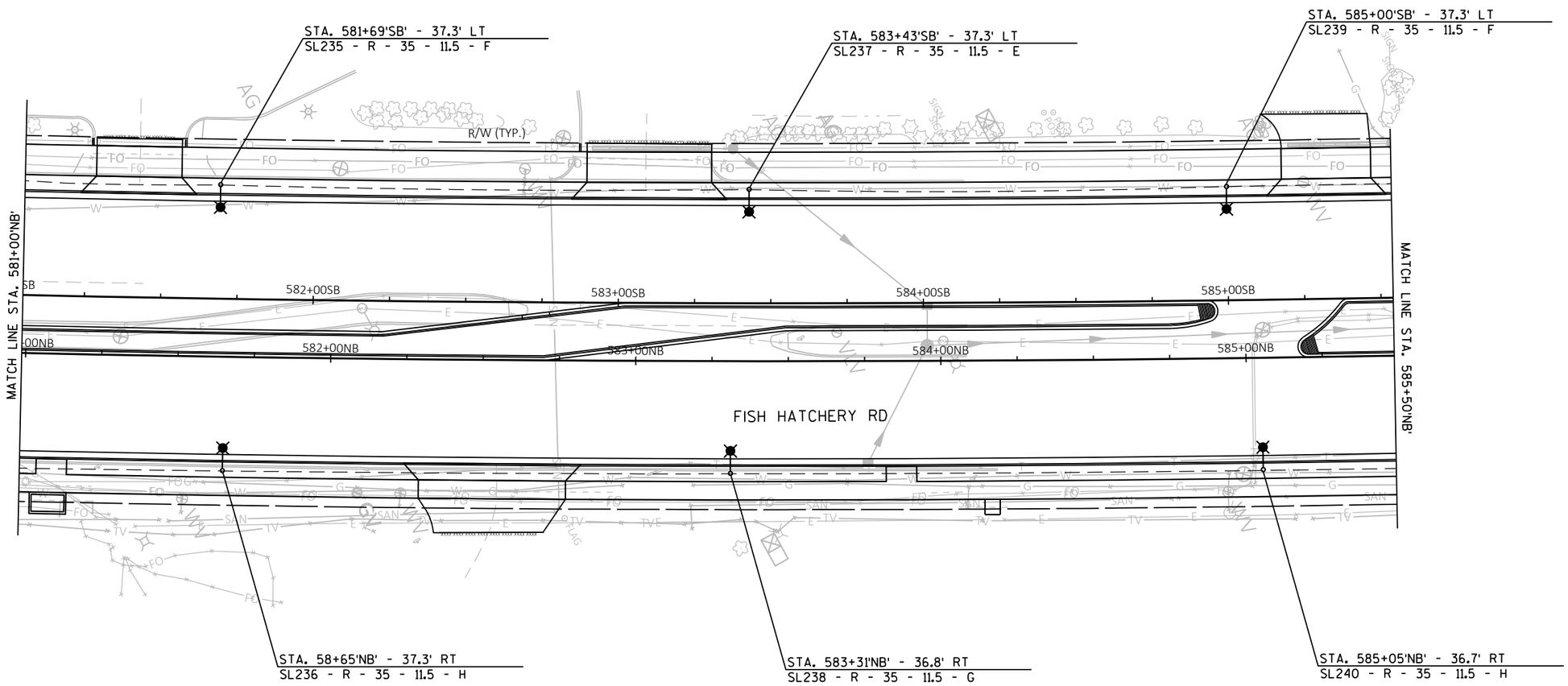

KL Engineering
[A] Better Experience
5400 King James Way
Suite 200
Madison, WI. 53719
Phone: (608) 663-1218
Phone: (800)-810-4012
http://klengineering.com
email@klengineering.com

CITY OF FITCHBURG

LIGHTING PLAN

Project No:	19-3488
Date:	OCT 2019
Designed By:	JAJ
Drafted By:	ACL
Checked By:	MDS

Revisions:

SHEET NO.

X OF X

PLOT DATE : 10/28/2019 3:35 PM

PLOT BY : JACOB JOYAL

FILE NAME : G:\FITCHBRG\18013-000\CIVIL3D\SHEETSPLAN\LIGHTING\KL_FHR_LTG_PROP - A.DWG

E_2 =

CB200	1	2"		
E	2	#6	1	#6
F	2	#6	-	-

G_2 =

CB200	1	2"		
G	2	#6	1	#6
H	2	#6	-	-

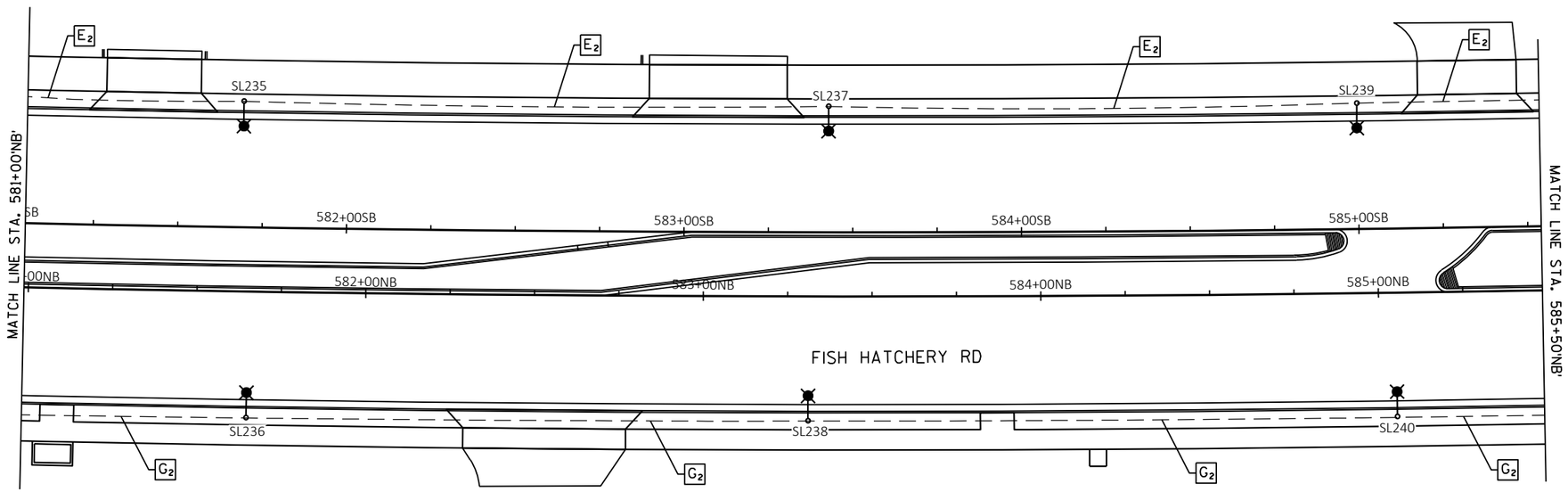

KL Engineering
[A] Better Experience
5400 King James Way
Suite 200
Madison, WI. 53719
Phone: (608) 663-1218
Phone: (800)-810-4012
http://klengineering.com
email@klengineering.com

CITY OF FITCHBURG

LIGHTING PLAN

Project No:	19-3488
Date:	OCT 2019
Designed By:	JAJ
Drafted By:	ACL
Checked By:	MDS

Revisions:

SHEET NO.

X OF X

PLOT DATE : 10/28/2019 3:26 PM

PLOT BY : JACOB JOYAL

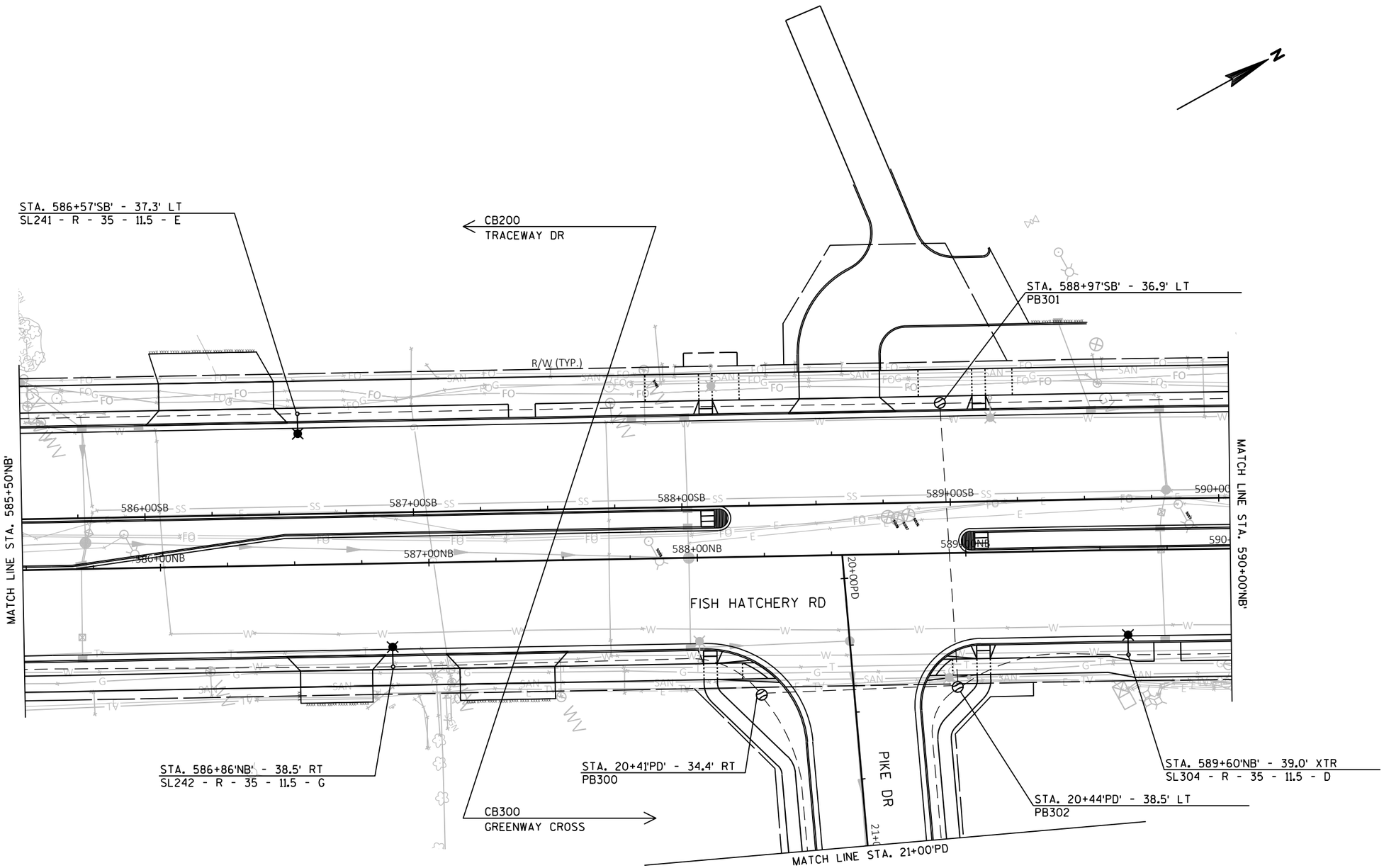

NOTES:

1) SEE SIGNAL PLANS FOR ALL LIGHTING WITH SHARED INFRASTRUCTURE.

KL Engineering
[A] Better Experience
5400 King James Way
Suite 200
Madison, WI. 53719
Phone: (608) 663-1218
Phone: (800)-810-4012
http://klengineering.com
email@klengineering.com

CITY OF FITCHBURG

LIGHTING PLAN

Project No:	19-3488
Date:	OCT 2019
Designed By:	JAJ
Drafted By:	ACL
Checked By:	MDS

Revisions:

SHEET NO.

X OF X

FILE NAME : G:\FITCHBRG\18013-000\CIVIL3D\SHEETSPLAN\LIGHTING\KL_FHR_LTG_PROP.DWG

PLOT DATE : 10/28/2019 3:36 PM

PLOT BY : JACOB JOYAL

FILE NAME : G:\FITCHBRG\18013-000\CIVIL3D\SHEETSPLAN\LIGHTING\KL_FHR_LTG_PROP - A.DWG

E_2 =

CB200	1	2"	
E	2	#6	1	#6
F	2	#6	-	-

G_2 =

CB200	1	2"	
G	2	#6	1	#6
H	2	#6	-	-

C_3 =

CB300	1	2"	
C	2	#6	1	#6
D	2	#6	-	-

D_3 =

CB300	1	3"	
C	2	#6	1	#6
D	2	#6	-	-

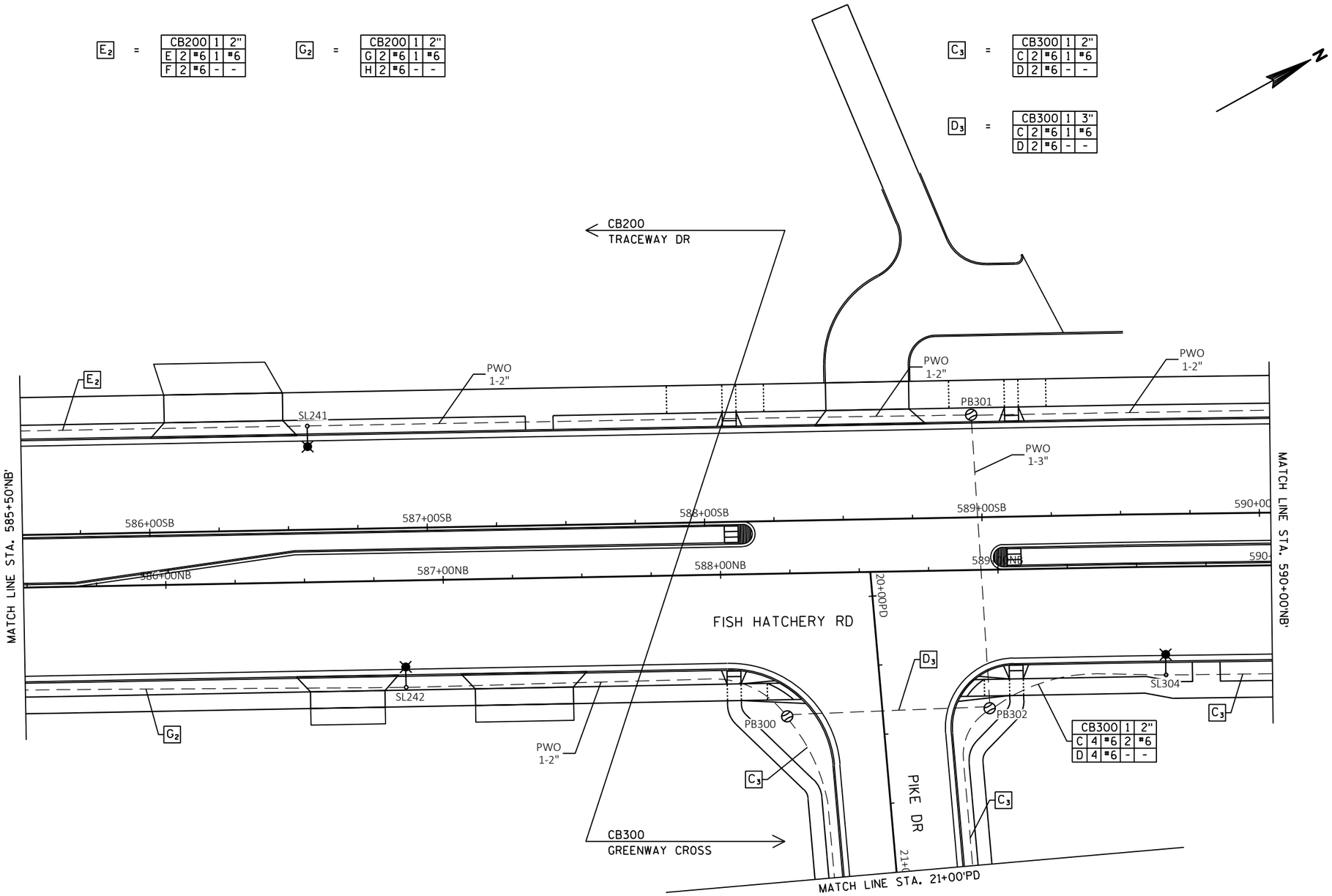

CB300	1	2"	
C	4	#6	2	#6
D	4	#6	-	-

KL Engineering
[A] Better Experience
5400 King James Way
Suite 200
Madison, WI. 53719
Phone: (608) 663-1218
Phone: (800)-810-4012
http://klengineering.com
email@klengineering.com

CITY OF FITCHBURG

LIGHTING PLAN

Project No: 19-3488
Date: OCT 2019
Designed By: JAJ
Drafted By: ACL
Checked By: MDS

Revisions:

SHEET NO.

X OF X

PLOT DATE : 10/28/2019 3:26 PM

PLOT BY : JACOB JOYAL

FILE NAME : G:\FITCHBRG\180113-000\CIVIL3D\SHEETSPLAN\LIGHTING\KL_FHR_LTG_PROP.DWG

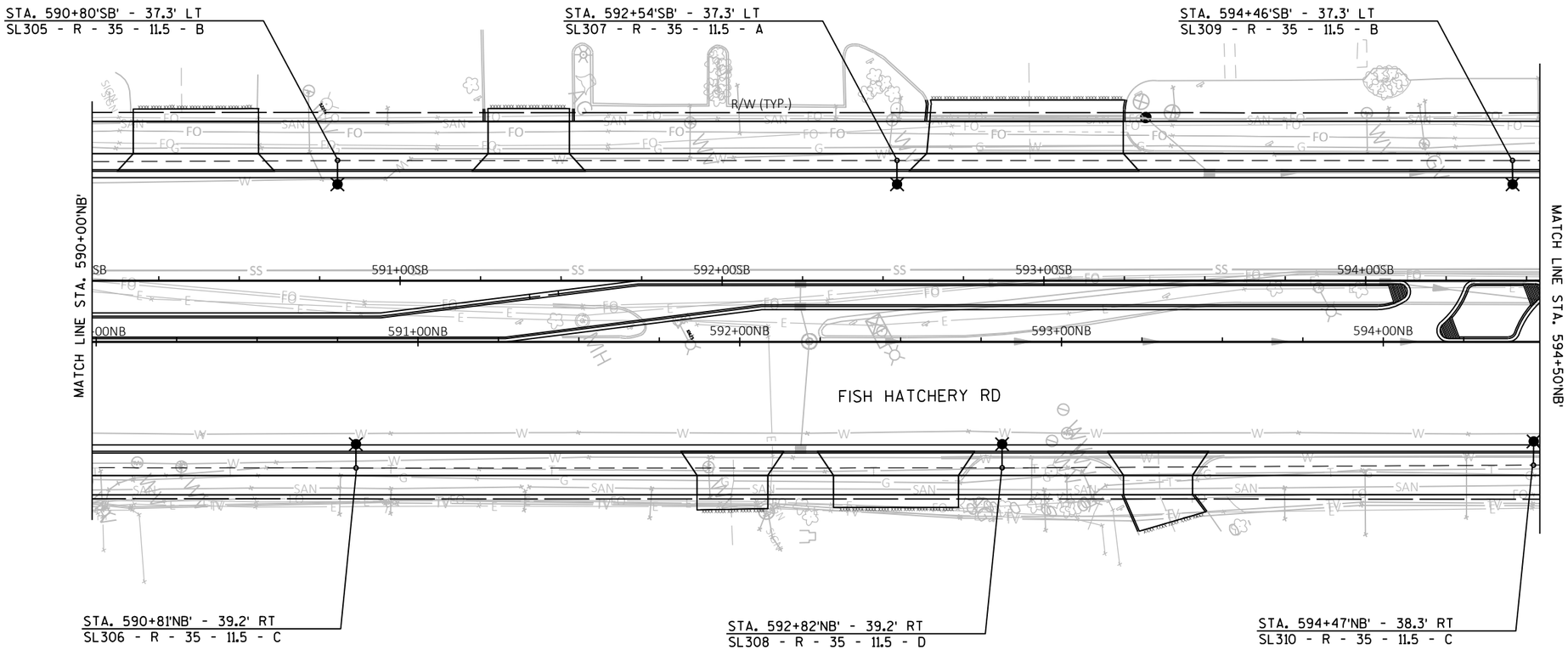

KL Engineering
[A] Better Experience
5400 King James Way
Suite 200
Madison, WI. 53719
Phone: (608) 663-1218
Phone: (800)-810-4012
http://klengineering.com
email@klengineering.com

CITY OF FITCHBURG

LIGHTING PLAN

Project No:	19-3488
Date:	OCT 2019
Designed By:	JAJ
Drafted By:	ACL
Checked By:	MDS

Revisions:

SHEET NO.

X OF X

PLOT DATE : 10/28/2019 3:36 PM

PLOT BY : JACOB JOYAL

FILE NAME : G:\FITCHBRG\180113-000\CIVIL3D\SHEETSPLAN\LIGHTING\KL_FHR_LTG_PROP - A.DWG

A_3 =

	CB300	1	2"	
A	2	#6	1	#6
B	2	#6	-	-

C_3 =

	CB300	1	2"	
C	2	#6	1	#6
D	2	#6	-	-

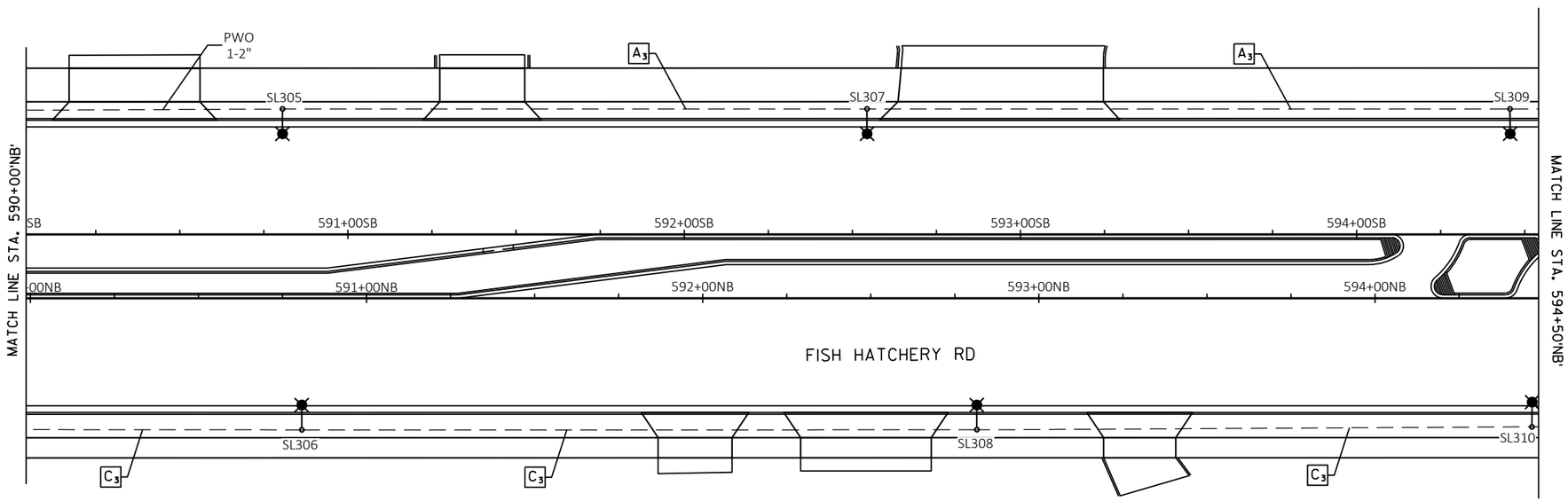

KL Engineering
[A] Better Experience
5400 King James Way
Suite 200
Madison, WI. 53719
Phone: (608) 663-1218
Phone: (800)-810-4012
http://klengineering.com
email@klengineering.com

CITY OF FITCHBURG

LIGHTING PLAN

Project No:	19-3488
Date:	OCT 2019
Designed By:	JAJ
Drafted By:	ACL
Checked By:	MDS

Revisions:

SHEET NO.

X OF X

PLOT DATE : 10/28/2019 3:27 PM

PLOT BY : JACOB JOYAL

FILE NAME : G:\FITCHBRG\180113-000\CIVIL3D\SHEETSPLAN\LIGHTING\KL_FHR_LTG_PROP.DWG

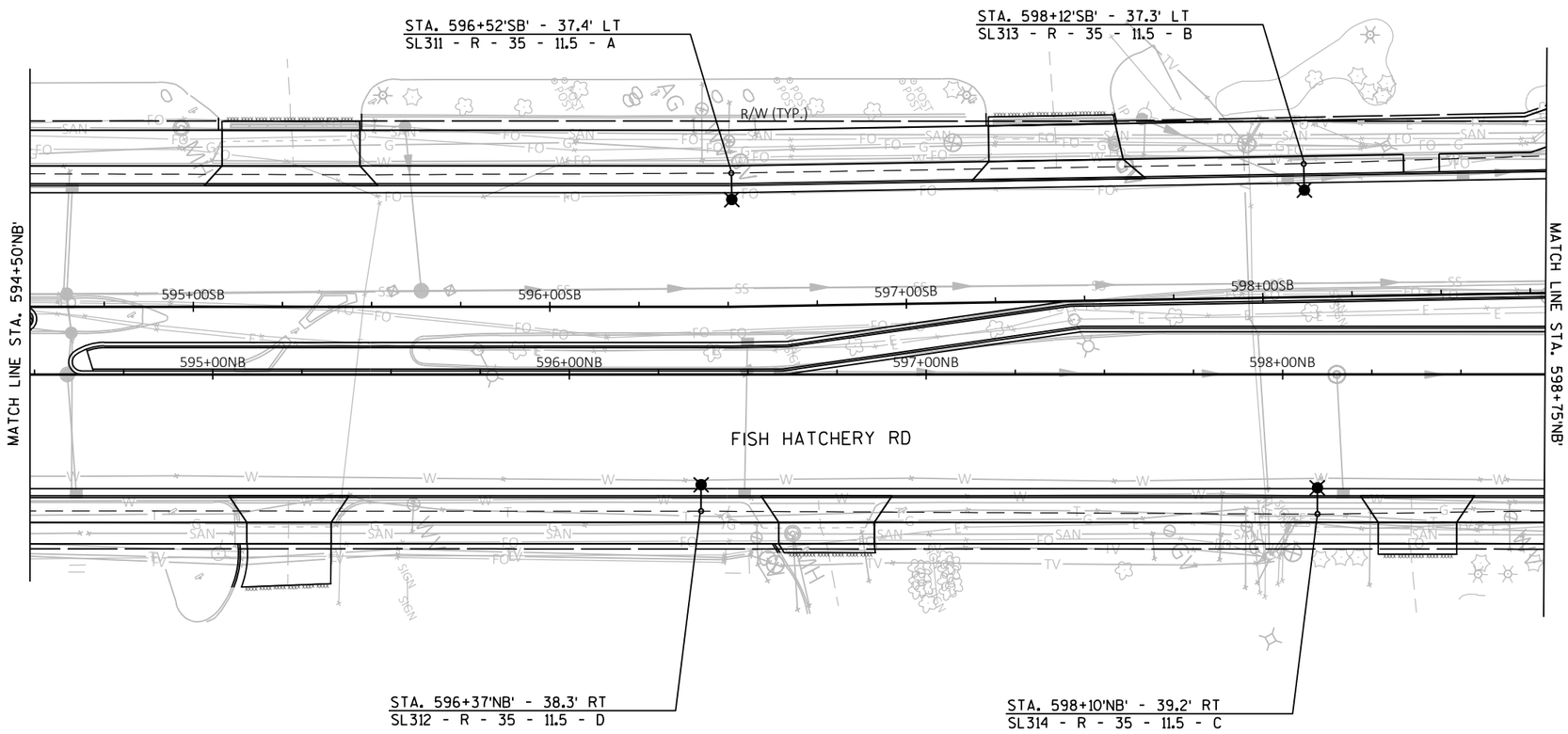

KL Engineering
[A] Better Experience
5400 King James Way
Suite 200
Madison, WI. 53719
Phone: (608) 663-1218
Phone: (800)-810-4012
http://klengineering.com
email@klengineering.com

CITY OF FITCHBURG

LIGHTING PLAN

Project No:	19-3488
Date:	OCT 2019
Designed By:	JAJ
Drafted By:	ACL
Checked By:	MDS

Revisions:

SHEET NO.

X OF X

PLOT DATE : 10/28/2019 3:36 PM

PLOT BY : JACOB JOYAL

FILE NAME : G:\FITCHBRG\18013-000\CIVIL3D\SHEETSPLAN\LIGHTING\KL_FHR_LTG_PROP - A.DWG

A_3 =

CB300	1	2"		
A	2	#6	1	#6
B	2	#6	-	-

C_3 =

CB300	1	2"		
C	2	#6	1	#6
D	2	#6	-	-

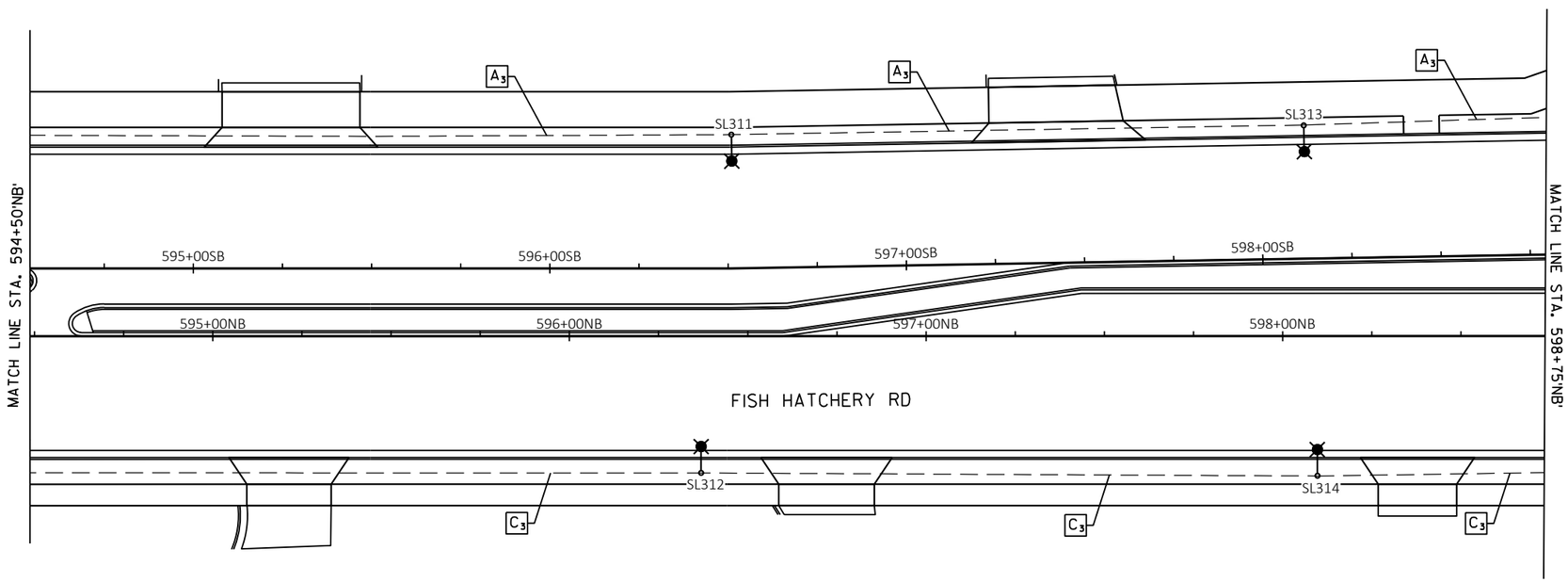

KL Engineering
[A] Better Experience
5400 King James Way
Suite 200
Madison, WI. 53719
Phone: (608) 663-1218
Phone: (800)-810-4012
http://klengineering.com
email@klengineering.com

CITY OF FITCHBURG

LIGHTING PLAN

Project No:	19-3488
Date:	OCT 2019
Designed By:	JAJ
Drafted By:	ACL
Checked By:	MDS

Revisions:

SHEET NO.

X OF X

PLOT DATE : 10/28/2019 3:27 PM

PLOT BY : JACOB JOYAL

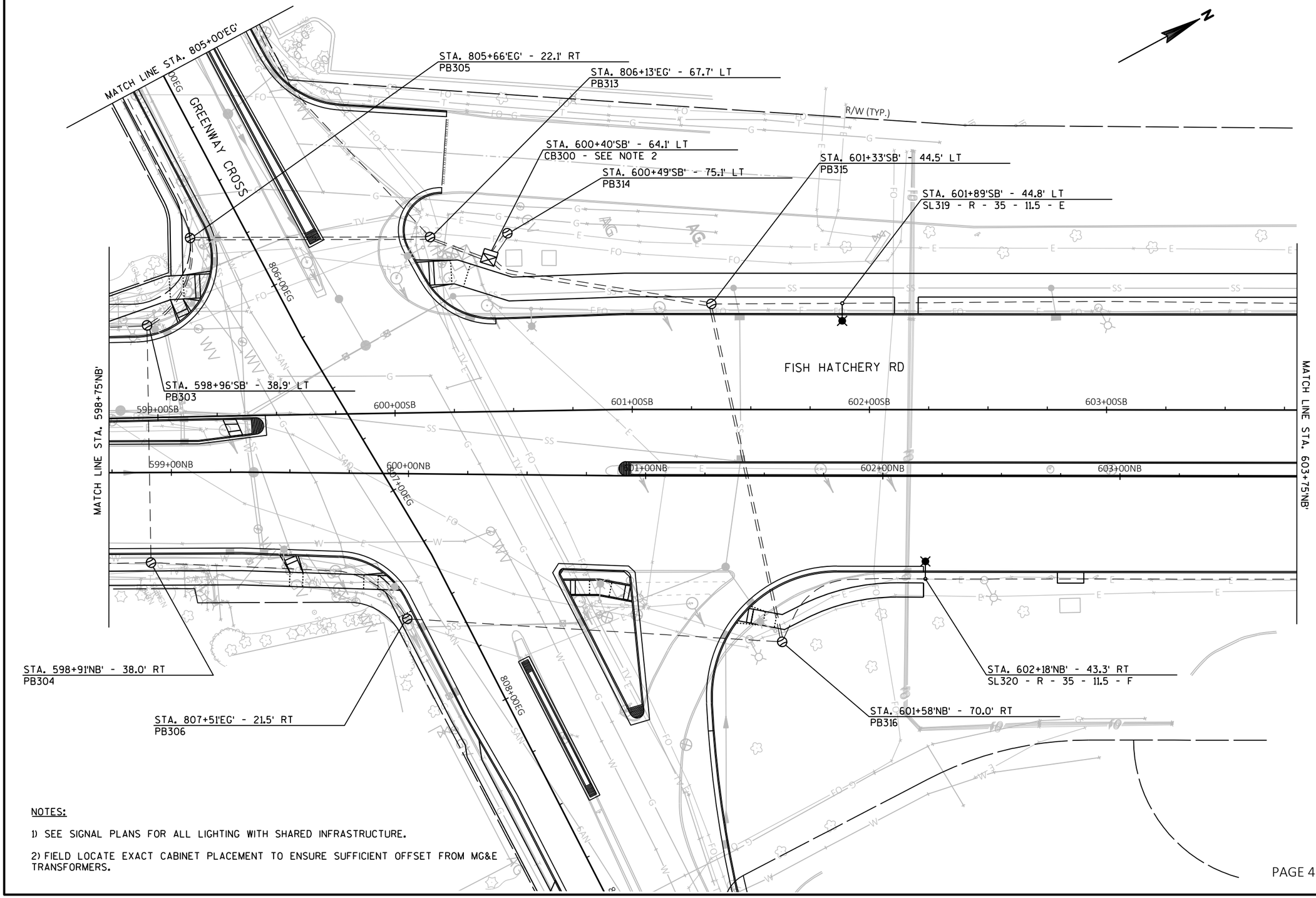

NOTES:

1) SEE SIGNAL PLANS FOR ALL LIGHTING WITH SHARED INFRASTRUCTURE.

2) FIELD LOCATE EXACT CABINET PLACEMENT TO ENSURE SUFFICIENT OFFSET FROM MG&E TRANSFORMERS.

KL Engineering
[A] Better Experience
5400 King James Way
Suite 200
Madison, WI. 53719
Phone: (608) 663-1218
Phone: (800)-810-4012
http://klengineering.com
email@klengineering.com

CITY OF FITCHBURG

LIGHTING PLAN

Project No:	19-3488
Date:	OCT 2019
Designed By:	JAJ
Drafted By:	ACL
Checked By:	MDS

Revisions:

SHEET NO.

X OF X

FILE NAME : G:\FITCHBRG\180113-000\CIVIL3D\SHEETSPLAN\LIGHTING\KL_FHR_LTG_PROP.DWG

PLOT DATE : 10/28/2019 3:36 PM

PLOT BY : JACOB JOYAL

FILE NAME : G:\FITCHBRG\18013-000\CIVIL3D\SHEETSPLAN\LIGHTING\KL_FHR_LTG_PROP - A.DWG

A_3 =	CB300	1	2"
A	2 #6	1	#6
B	2 #6	-	-

B_3 =	CB300	1	3"
A	2 #6	1	#6
B	2 #6	-	-

C_3 =	CB300	1	2"
C	2 #6	1	#6
D	2 #6	-	-

D_3 =	CB300	1	3"
C	2 #6	1	#6
D	2 #6	-	-

E_3 =	CB300	1	2"
E	2 #6	1	#6
F	2 #6	-	-

F_3 =	CB300	1	3"
E	2 #6	1	#6
F	2 #6	-	-

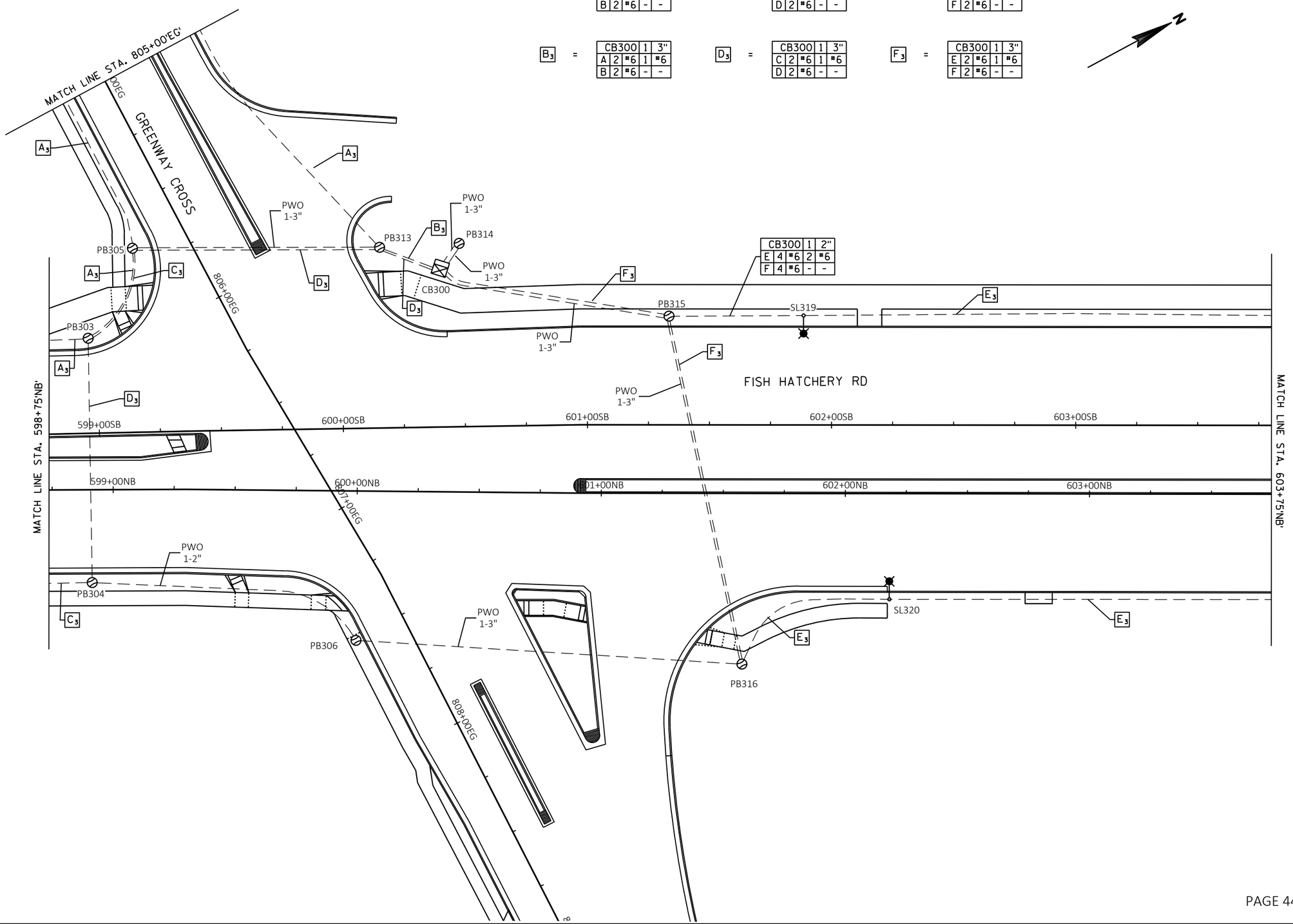

KL Engineering
[A] Better Experience
5400 King James Way
Suite 200
Madison, WI. 53719
Phone: (608) 663-1218
Phone: (800)-810-4012
http://klengineering.com
email@klengineering.com

CITY OF FITCHBURG

LIGHTING PLAN

Project No:	19-3488
Date:	OCT 2019
Designed By:	JAJ
Drafted By:	ACL
Checked By:	MDS

Revisions:

SHEET NO.

X OF X

PLOT DATE : 10/28/2019 3:28 PM

PLOT BY : JACOB JOYAL

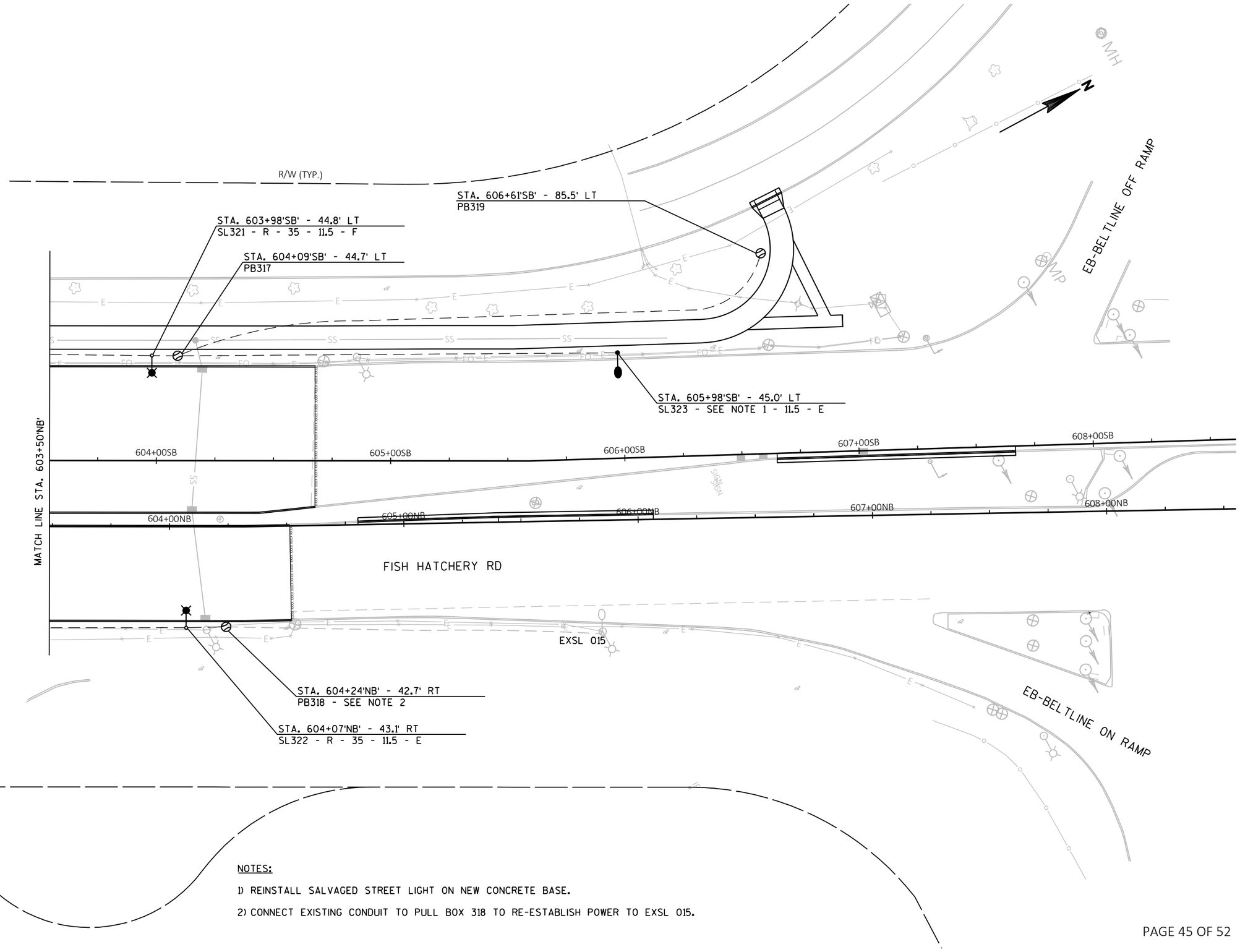

NOTES:

1) REINSTALL SALVAGED STREET LIGHT ON NEW CONCRETE BASE.

2) CONNECT EXISTING CONDUIT TO PULL BOX 318 TO RE-ESTABLISH POWER TO EXSL 015.

KL Engineering
[A] Better Experience
5400 King James Way
Suite 200
Madison, WI. 53719
Phone: (608) 663-1218
Phone: (800)-810-4012
http://klengineering.com
email@klengineering.com

CITY OF FITCHBURG

LIGHTING PLAN

Project No:	19-3488
Date:	OCT 2019
Designed By:	JAJ
Drafted By:	ACL
Checked By:	MDS

Revisions:

SHEET NO.

X OF X

FILE NAME : G:\FITCHBRG\18013-000\CIVIL3D\SHEETSPLAN\LIGHTING\KL_FHR_LTG_PROP.DWG

PLOT DATE : 10/28/2019 3:36 PM

PLOT BY : JACOB JOYAL

FILE NAME : G:\FITCHBRG\18013-000\CIVIL3D\SHEETSPLAN\LIGHTING\KL_FHR_LTG_PROP - A.DWG

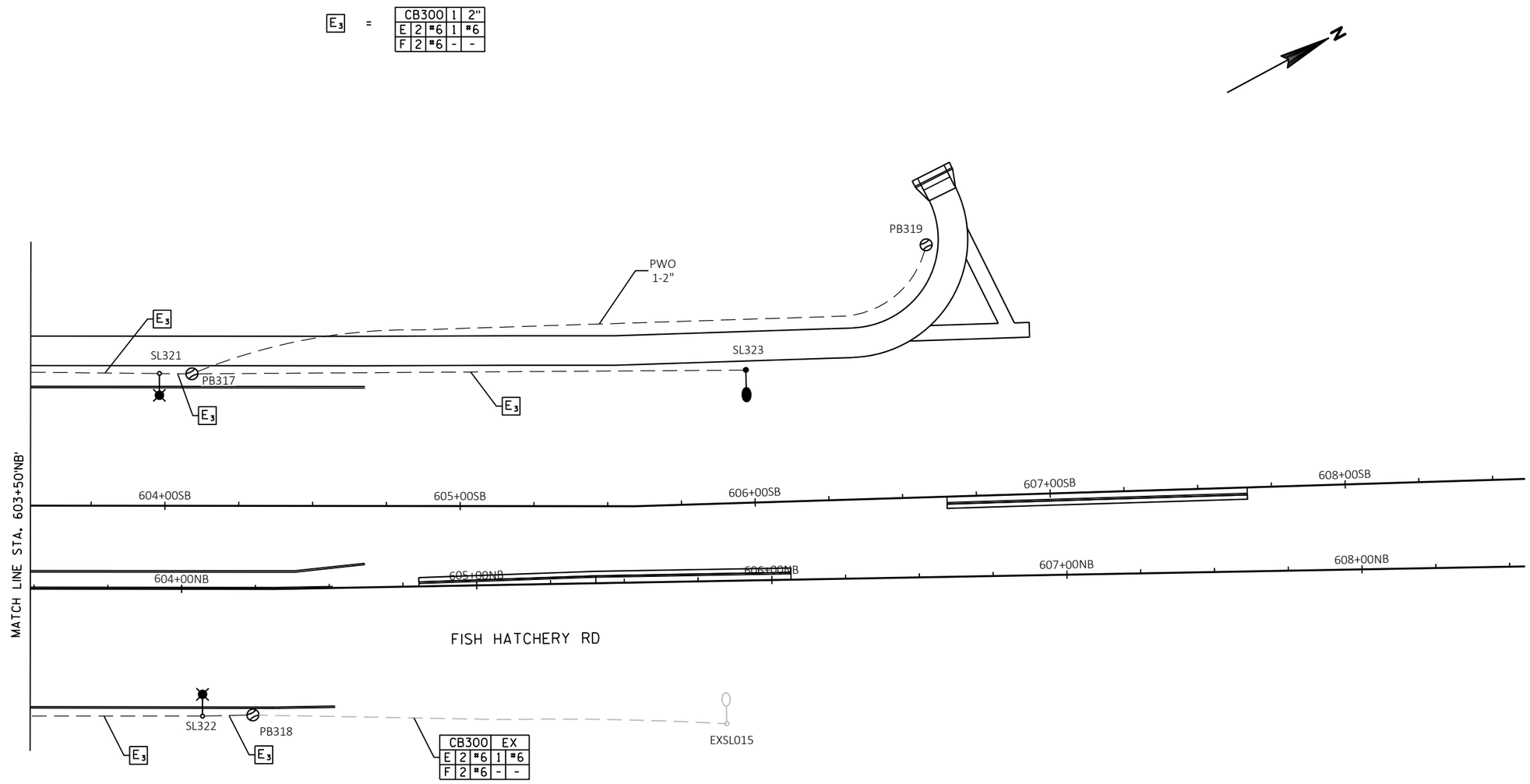

KL Engineering
[A] Better Experience
5400 King James Way
Suite 200
Madison, WI. 53719
Phone: (608) 663-1218
Phone: (800)-810-4012
http://klengineering.com
email@klengineering.com

CITY OF FITCHBURG

LIGHTING PLAN

Project No:	19-3488
Date:	OCT 2019
Designed By:	JAJ
Drafted By:	ACL
Checked By:	MDS

Revisions:

SHEET NO.

X OF X

PLOT DATE : 10/28/2019 3:28 PM

PLOT BY : JACOB JOYAL

FILE NAME : G:\FITCHBRG\18013-000\CIVIL3D\SHEETSPLAN\LIGHTING\KL_FHR_LTG_PROP.DWG

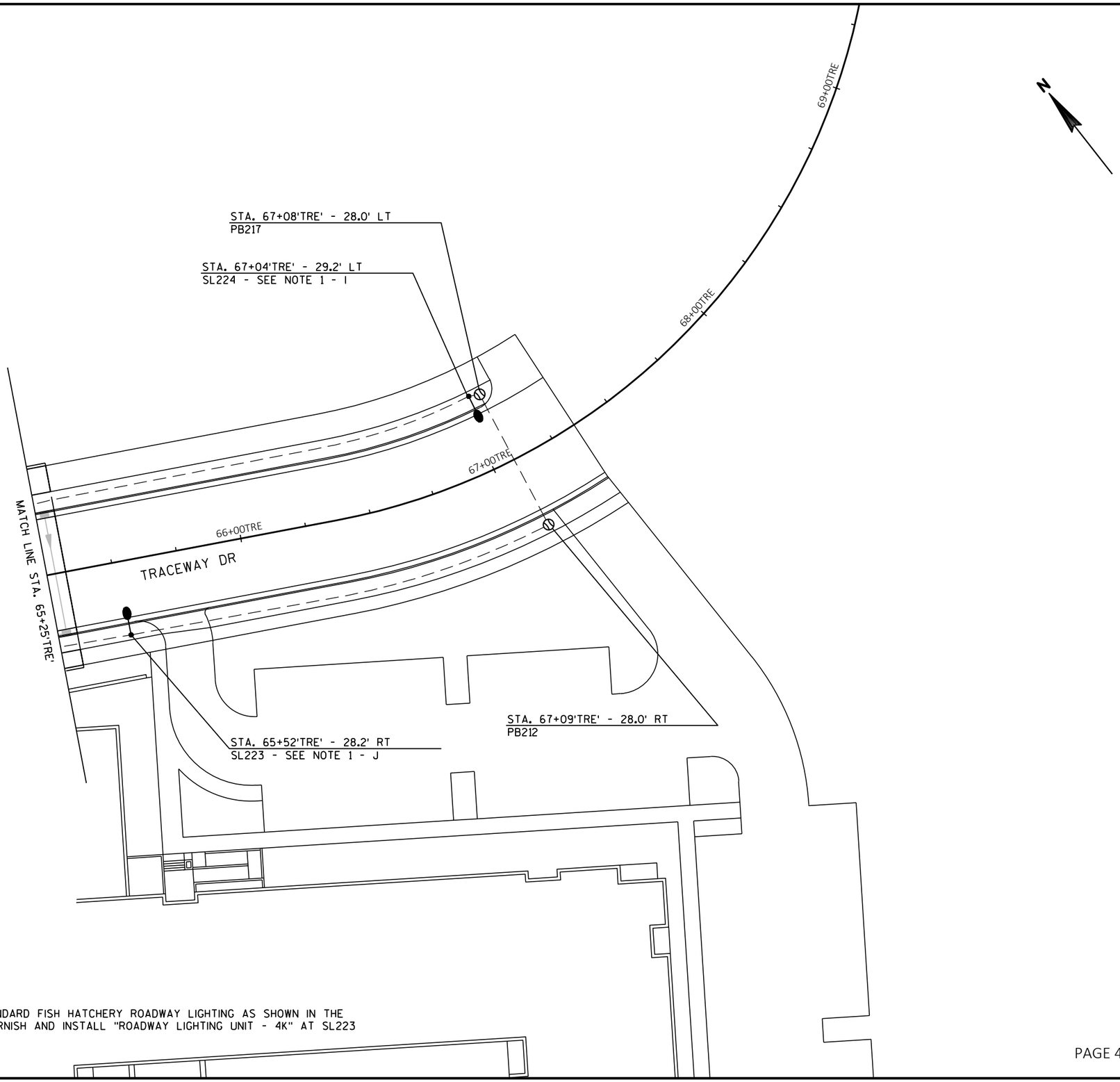

NOTES:

1) ROADWAY LIGHTING UNIT WILL NOT MATCH STANDARD FISH HATCHERY ROADWAY LIGHTING AS SHOWN IN THE CONSTRUCTION DETAILS. CONTRACTOR SHALL FURNISH AND INSTALL "ROADWAY LIGHTING UNIT - 4K" AT SL223 AND SL224.

KL Engineering
[A] Better Experience
5400 King James Way
Suite 200
Madison, WI. 53719
Phone: (608) 663-1218
Phone: (800)-810-4012
http://klengineering.com
email@klengineering.com

CITY OF FITCHBURG

LIGHTING PLAN

Project No:	19-3488
Date:	OCT 2019
Designed By:	JAJ
Drafted By:	ACL
Checked By:	MDS

Revisions:

SHEET NO.

X OF X

PLOT DATE : 10/28/2019 3:36 PM

PLOT BY : JACOB JOYAL

FILE NAME : G:\FITCHBRG\180113-000\CIVIL3D\SHEETSPLAN\LIGHTING\KL_FHR_LTG_PROP - A.DWG

1 2	=	CB200	1	2"
		1 2 #6	1	#6
		J 2 #6	-	-

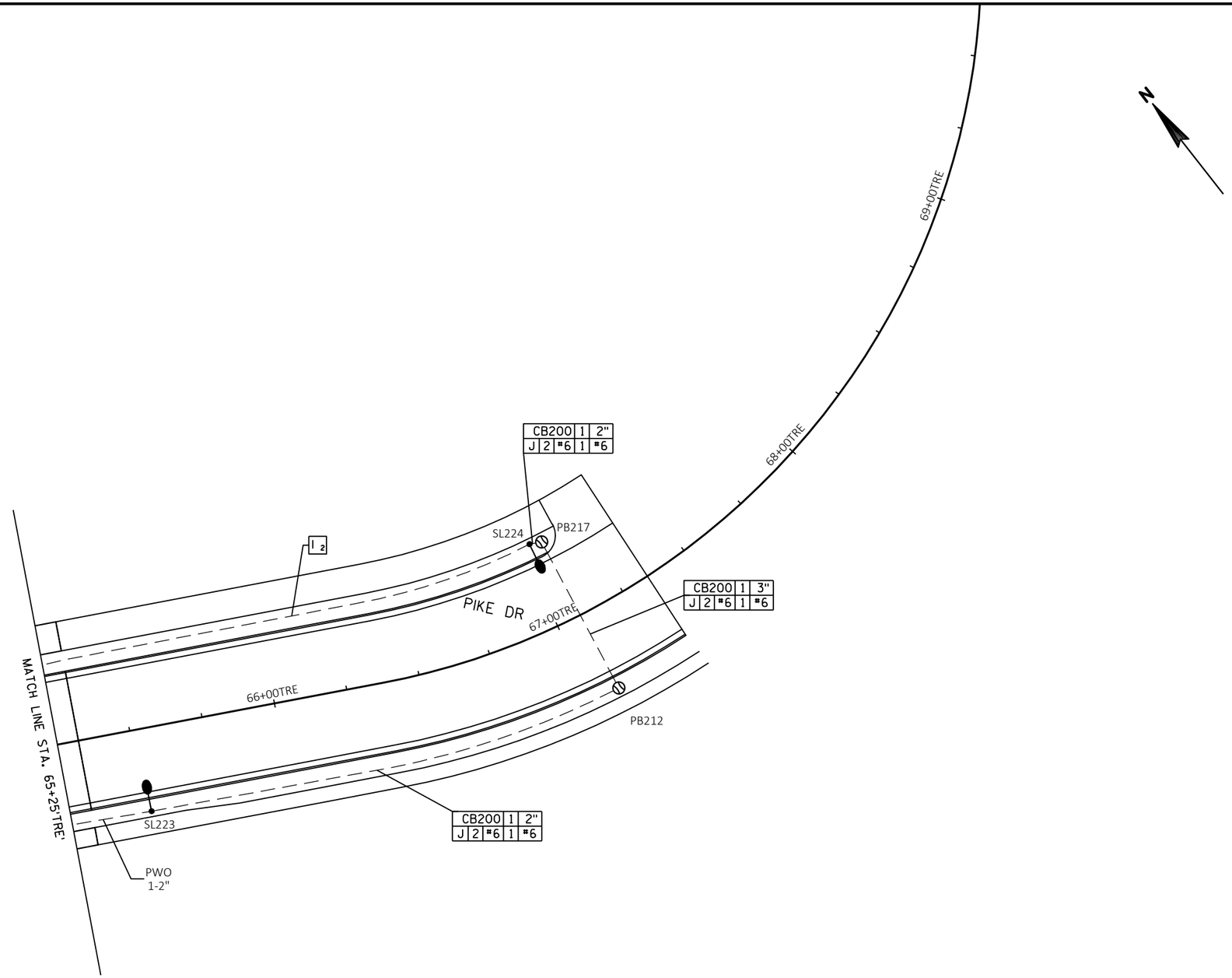

KL Engineering
[A] Better Experience
5400 King James Way
Suite 200
Madison, WI. 53719
Phone: (608) 663-1218
Phone: (800)-810-4012
http://klengineering.com
email@klengineering.com

CITY OF FITCHBURG

LIGHTING PLAN

Project No:	19-3488
Date:	OCT 2019
Designed By:	JAJ
Drafted By:	ACL
Checked By:	MDS

Revisions:

SHEET NO.

X OF X

PLOT DATE : 10/28/2019 3:29 PM

PLOT BY : JACOB JOYAL

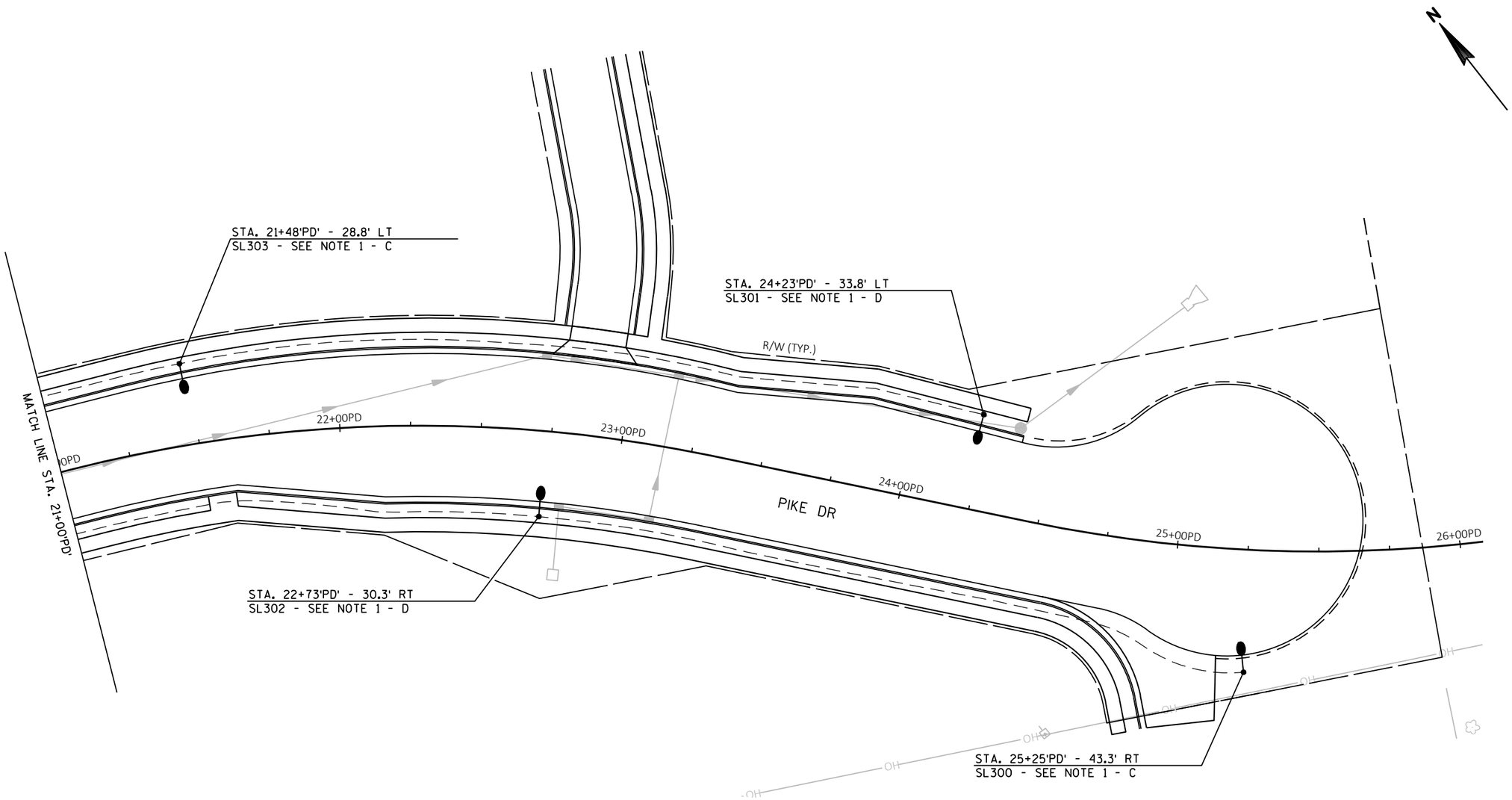

NOTES:

1) ROADWAY LIGHTING UNIT WILL NOT MATCH STANDARD FISH HATCHERY ROADWAY LIGHTING AS SHOWN IN THE CONSTRUCTION DETAILS. CONTRACTOR SHALL FURNISH AND INSTALL "ROADWAY LIGHTING UNIT - 3K" AT SL300, SL301, SL302 AND SL303.

KL Engineering
[A] Better Experience
5400 King James Way
Suite 200
Madison, WI. 53719
Phone: (608) 663-1218
Phone: (800)-810-4012
http://klengineering.com
email@klengineering.com

CITY OF FITCHBURG

LIGHTING PLAN

Project No:	19-3488
Date:	OCT 2019
Designed By:	JAJ
Drafted By:	ACL
Checked By:	MDS

Revisions:

SHEET NO.

X OF X

FILE NAME : G:\FITCHBRG\18013-000\CIVIL3D\SHEETSPLAN\LIGHTING\KL_FHR_LTG_PROP.DWG